# CLEVELAND MEDICAL MART
## AND CONVENTION CENTER
## MECH. STACKS SHOP DRAWINGS

## GENERAL NOTES

ALL MATERIAL TO WHICH CURTAINWALL FRAMING IS TO BE ANCHORED MUST BE STRUCTURALLY SOUND AND CAPABLE OF SUPPORTING WEIGHTS AND REACTIONS OF THE CURTAIN WALL OR WINDOWS UNDER MAXIMUM DESIGN LOADS.

"GMS" ASSUMES NO RESPONSIBILITY FOR WORK AND/OR ERRORS INCURRED BY ANY OTHER TRADES THROUGH THE USE OF THESE DRAWINGS.

THESE DRAWINGS, WHEN MARKED APPROVED, SHALL BE DEEMED AS AN ACCURATE INTERPRETATION OF PROJECT REQUIREMENTS AND SUCH APPROVAL SHALL CONSTITUTE AUTHORIZATION TO PROCEED WITH SHOP FABRICATION. ANY CHANGES REQUESTED, SUBSEQUENT TO THE APPROVAL DATE, MUST BE SUBMITTED IN WRITING.

FINISH:
MATERIAL EXPOSED TO EXTERIOR: DURANAR SILVERSMITH UC 70092
BRAKE METAL CAP AND TUBE GRILLS: DURANAR GRAY VELVET UC 70214F
TYPICAL: ALODINE
ALL STEEL TO BE GALVANIZED

ALUMINUM IN CONTACT WITH SILICONE SEALANT AND REQUIRED TO CREATE A LOAD CARRYING BOND TO HAVE AN ALODINE FINISH.

ALLOY AND TEMPER:
ALUMINUM EXTRUSIONS - 6063-T6.
ALUMINUM EXTRUDED ANCHORS - 6105-T5 OR 6005-T5.
ALUMINUM SHEET AND BRAKE METAL - 3003-H14.
STRUCTURAL STEEL SHAPES - A-36.

FASTENERS:
ALL FASTENERS TO BE 300 SERIES STAINLESS STEEL.

SETTING BLOCKS:
SETTING BLOCKS TO BE BLACK SILICONE ±85 DUROMETER, SHORE-A, PER ASTM D2000-M1AA815.
A. LENGTH OF SETTING BLOCK EQUALS - TOTAL SQUARE FEET OF GLASS PANEL X 0.1" OR 4", WHICH EVER IS GREATER.
B. LOCATION OF SETTING BLOCK EQUALS - DISTANCE FROM CENTERLINE OF SETTING BLOCK TO EDGE OF GLASS TO BE 8".
C. CENTER SETTING 8" FROM EDGE OF GLASS (TYP.).

SEALANTS:
SILICONE SEALANT AND BACKER ROD TO BE APPLIED IN STRICT ACCORDANCE WITH THE MANUFACTURES PUBLISHED INSTRUCTIONS.

GLASS:
SURFACE COVERAGE OF SILICONE SEALANT AT PERIMETER OF TWO OR FOUR SIDED BUTT JOINT GLAZING TO BE AS REQUIRED BY SPECIFIED IMPOSED LOADING.
SEE GLAZING SCHEDULE FOR GLASS TYPES.

MISCELLANEOUS:
ALL EXPANSION ANCHORS ATTACHED TO STRUCTURAL MULLIONS REQUIRE SLIP PADS AND/OR SLIP WASHERS TO FACILITATE THE DESIGNED DIFFERENTIAL MOVEMENT OF THE WALL SYSTEM AND BUILDING STRUCTURE.

PROTECT ALUMINUM FROM NONCOMPATIBLE DISSIMILAR MATERIALS PER THE ALUMINUM ASSOCIATIONS PUBLISHED INSTRUCTIONS.

## DESIGN CRITERIA

WINDLOAD INFORMATION

THE WINDLOADS BELOW ARE FOR A TRIBUTARY AREA OF 50 SQUARE FEET

MECHANICAL STACKS + / - 23.3 PSF

DESIGN CRITERIA FOR TUBE GRILLS IS 200# POINT LOAD

WINDLOADS WILL BE CALCULATED FOR ALL OTHER TRIBUTARY AREAS AS REQUIRED. THE MINIMUM EXTERIOR WINDLOAD WILL BE +/-20PSF (PER SPECIFICATION 88100, 1.3, B, 1).

DEFLECTION INFORMATION

| | |
|---|---|
| NORMAL: | L/175 FOR SPANS LESS THAN 13'-6" |
| | L/240 + 1/4" SPANS GREATER THAN 13'-6" |
| PARALLEL: | 1/8" MAXIMUM |
| | |
| AIR: | N/A |
| WATER: | N/A |
| LIVELOAD: | N/A |

## DRAWING INDEX


| SHT. # | DESCRIPTION |
|---|---|
| 1XX | COVER |
| 2XX | KEY PLANS |
| 3XX | ELEVATIONS |
| 4XX | VERTICAL DETAILS |
| 5XX | HORIZONTAL DETAILS |
| 6XX | ANCHOR DETAILS |


GMS
WWW.GARDNERMETAL.COM

LEGENDS

PROJECT
#337
CMMCC
MECH. STACKS
SHOP DRAWINGS

CUSTOMER
HARMON INC.
BOLINGBROOK IL

ARCHITECT
LMN ARCHITECTS
SEATTLE WASHINGTON

GENERAL CONTRACTOR
TURNER

SUBMITTALS

| NO | REV | DATE | DESCRIPTION |
|---|---|---|---|
| 1 | -- | 1/12/12 | 1ST SUBMITTAL |
| 2 | 1 | 3/21/12 | 2ND SUBMITTAL |
| 3 | 2 | 6/5/12 | FIELD & FILE |

CONTENTS: COVER SHEET
DWN: WP SCALE: FULL SCALE

SHEET NUMBER
101

© 2010 GARDNER METAL SYSTEMS, INC. All Rights Reserved

PDF processed with CutePDF evaluation edition www.CutePDF.com

# LEGENDS AND SCHEDULES

## SYMBOLS LEGEND

| DESCRIPTION | LEGEND |
|---|---|
| DETAIL MARK | 1 / 401 — DETAIL # / SHEET # |
| FLOOR LINE MARK | FIRST FLOOR — ELEVATION: 32' - 0" |
| ELEVATION LABEL | 1 — ELEVATION — REF NO: A1 / REF SHT: A-501 — TOTAL QUANTITY THUS: |
| COLUMN NO. LABEL | A |
| CENTERLINE MARK | ℄ |
| REVISION NO. MARKS | 1 2 3 |
| DETAIL LABEL | 1 — HORIZONTAL DETAIL — ARCH. DETAIL REF: B6 — ARCH. SHEET REF: A-923 |
| WORK POINT MARK | |
| FASTENER LABEL MARK | S12-03 |
| KEY PLAN LABEL | 1 — FIRST FLOOR — ARCH. DETAIL REF: A5 — ARCH. SHEET REF: A-102N |
| ELEVATION TAG MARK | 1 / 301 |
| SECTION CUT MARK | 1 / 401 |

## FASTENER SCHEDULE

| GMS ID NUMBER | SIZE/LENGTH | DESCRIPTION | FINISH | SHEET REFERENCE |
|---|---|---|---|---|
| B12-06 | 1/2" X 4" | HEX HEAD MACHINE BOLT | SS | 402 |
| N337-01 | 1/2" | NYLON LOCK NUT | SS | 402 |
| S12-04 | #12 X 1 1/2" | HEX WASHER HEAD W/ AB POINT | SS | 502 |
| S12-07 | #12 X 1" | PHILLIPS FLAT HEAD UNDERCUT W/ AB POINT | SS | 401 |
| S337-03 | #12 X 1" | HEX WASHER HEAD W/AB POINT | SS | 401 |
| S337-11 | 1/4" X 1 1/2" | HEX WASHER HEAD BIFLEX | SS | 401 |
| S337-13 | 1/4-20 X 3/4" | SOCKET HEAD SET SCREW | SS | 401 |
| S337-14 | #12 X 3/4" | HEX WASHER HEAD W/ AB POINT | SS | 502 |
| W12-03 | 1/2" | NYLON WASHER | NY | 402 |
| W337-01 | 1/2" DIA | FLAT WASHER | SS | 402 |

## GASKET SCHEDULE

| PICTURE | DESCRIPTION | PART # |
|---|---|---|
| | NORTON TAPE (SEE DETAILS FOR SIZES) | V2200 |
| | 85 DUROMETER SILICONE SETTING BLOCK, 2 PER LITE @ 6" LONG. CENTERLINE OF BLOCK LOCATED 8" FROM EDGE OF GLASS (BUTT GLAZE HORIZONTAL) | |
| | HIGH IMPACT PLASTIC SHIM | N/A |

## GLASS SCHEDULE

| PATTERN | DESCRIPTION | TAG |
|---|---|---|
| | 13/16" LAMINATED GLASS<br>3/8" CLEAR HEAT STRENGTHENED<br>VS-08 #2<br>.060 CLEAR PVB<br>1/4" CLEAR HEAT STRENGTHENED<br>V907 - BLACK #4 (DOUBLE PASS) | GL-27 |

GMS
WWW.GARDNERMETAL.COM

LEGENDS

PROJECT

#337
CMMCC
MECH. STACKS
SHOP DRAWINGS

CUSTOMER
HARMON INC.
BOLINGBROOK IL

ARCHITECT
LMN ARCHITECTS
SEATTLE WASHINGTON

GENERAL CONTRACTOR
TURNER

SUBMITTALS

| NO | REV | DATE | DESCRIPTION |
|---|---|---|---|
| 1 | -- | 1/12/12 | 1ST SUBMITTAL |
| 2 | 1 | 3/21/12 | 2ND SUBMITTAL |
| 3 | 2 | 6/5/12 | FIELD & FILE |

CONTENTS: COVER SHEET
DWN: ASP SCALE: FULL SIZE

SHEET NUMBER
102

© 2010 GARDNER METAL SYSTEMS, INC. All Rights Reserved

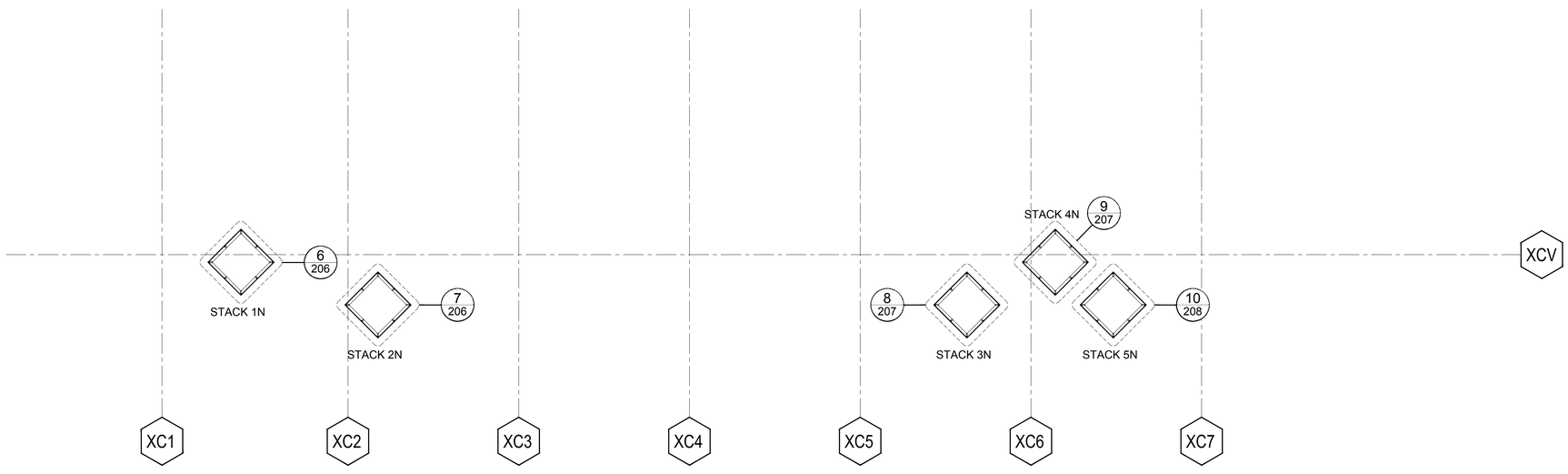


1 STACKS NORTH OF LAKESIDE
ARCH. DETAIL REF: 1
ARCH. SHEET REF: A204J

LAKESIDE LEVEL EL-647'-8 $\frac{1}{2}$"

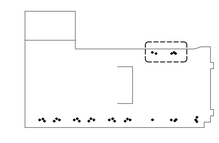

KEY PLAN

WWW.GARDNERMETAL.COM

LEGENDS

PROJECT

# #337 CMMCC MECH. STACKS SHOP DRAWINGS

CUSTOMER
HARMON INC.
BOLINGBROOK IL

ARCHITECT
LMN ARCHITECTS
SEATTLE WASHINGTON

GENERAL CONTRACTOR
TURNER

SUBMITTALS

| NO | REV | DATE | DESCRIPTION |
|---|---|---|---|
| 1 | -- | 1/12/12 | 1ST SUBMITTAL |
| 2 | 1 | 3/21/12 | 2ND SUBMITTAL |
| 3 | 2 | 6/5/12 | FIELD & FILE |

CONTENTS: KEY PLAN
DWN: WP SCALE: 3/32" = 1'-0"

SHEET NUMBER
201

© 2010 GARDNER METAL SYSTEMS, INC. All Rights Reserved

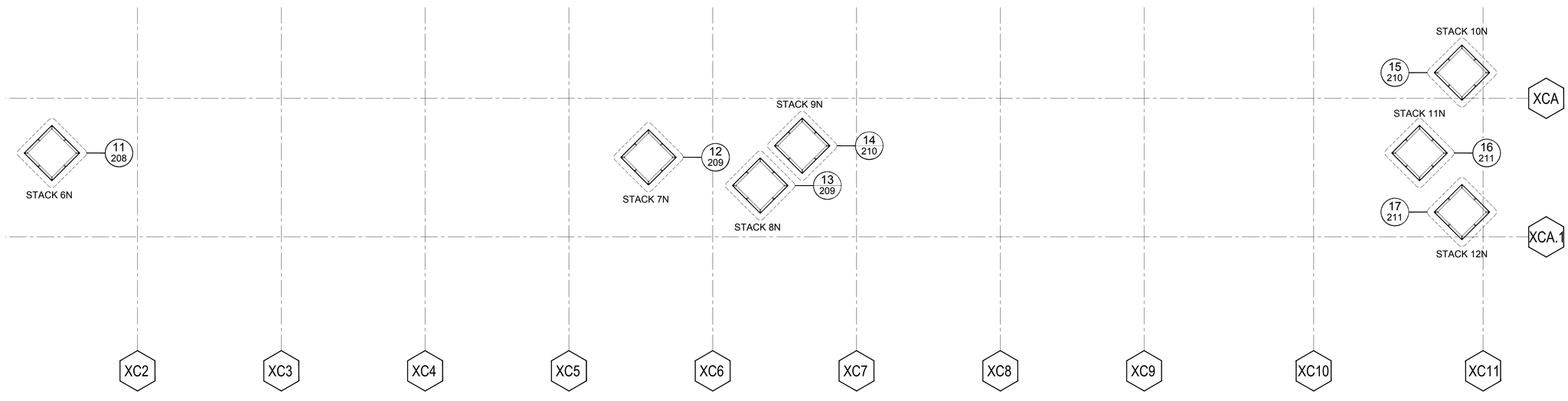


2 STACKS NORTH OF LAKESIDE
ARCH. DETAIL REF: 1
ARCH. SHEET REF: A204D & A204G

LAKESIDE LEVEL EL-647'-8 $\frac{1}{2}$"

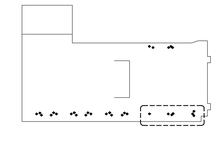

KEY PLAN

GMS
WWW.GARDNERMETAL.COM

LEGENDS

PROJECT

# #337 CMMCC MECH. STACKS

SHOP DRAWINGS

CUSTOMER
HARMON INC.
BOLINGBROOK IL

ARCHITECT
LMN ARCHITECTS
SEATTLE WASHINGTON

GENERAL CONTRACTOR
TURNER

SUBMITTALS

| NO | REV | DATE | DESCRIPTION |
|---|---|---|---|
| 1 | -- | 1/12/12 | 1ST SUBMITTAL |
| 2 | 1 | 3/21/12 | 2ND SUBMITTAL |
| 3 | 2 | 6/5/12 | FIELD & FILE |

CONTENTS: KEY PLAN
DWN: WP SCALE: 3/32" = 1'-0"

SHEET NUMBER
202

© 2010 GARDNER METAL SYSTEMS, INC. All Rights Reserved

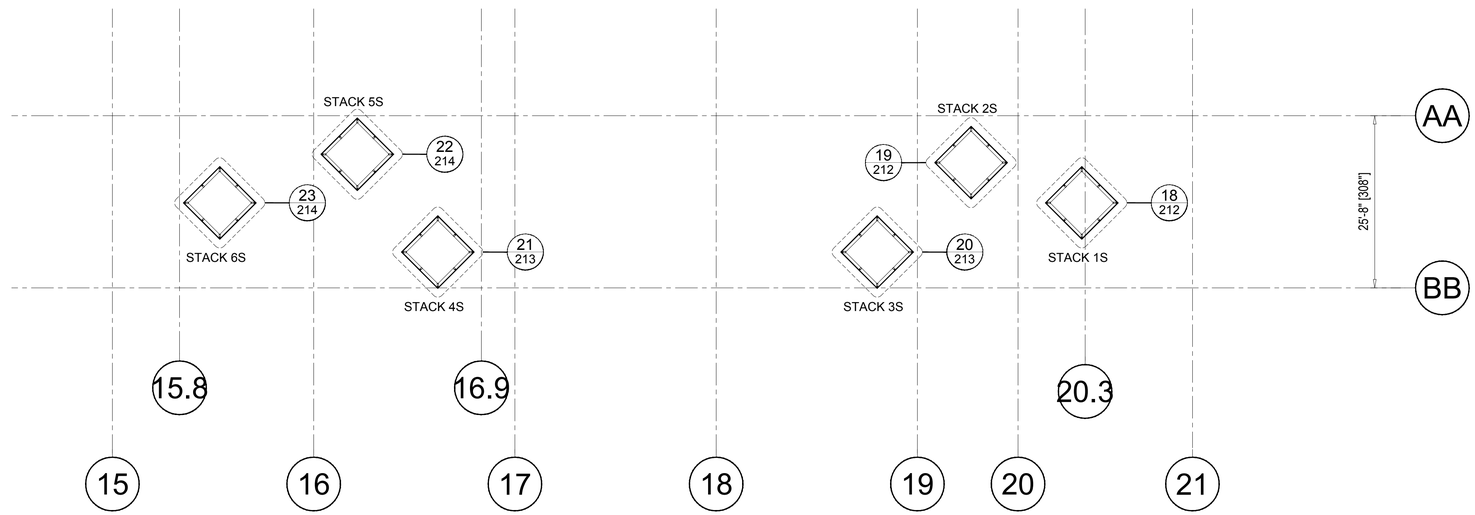


3 STACKS SOUTH OF LAKESIDE
ARCH. DETAIL REF: 1
ARCH. SHEET REF: A204K

N

LAKESIDE LEVEL EL-647'-8 $\frac{1}{2}$"

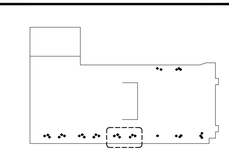

KEY PLAN

WWW.GARDNERMETAL.COM

LEGENDS

PROJECT

#337
CMMCC
MECH. STACKS
SHOP DRAWINGS

CUSTOMER
HARMON INC.
BOLINGBROOK IL

ARCHITECT
LMN ARCHITECTS
SEATTLE WASHINGTON

GENERAL CONTRACTOR
TURNER

SUBMITTALS

| NO | REV | DATE | DESCRIPTION |
|---|---|---|---|
| 1 | -- | 1/12/12 | 1ST SUBMITTAL |
| 2 | 1 | 3/21/12 | 2ND SUBMITTAL |
| 3 | 2 | 6/5/12 | FIELD & FILE |

CONTENTS: KEY PLAN
DWN: WP SCALE: 3/32" = 1'-0"

SHEET NUMBER
203

© 2010 GARDNER METAL SYSTEMS, INC. All Rights Reserved

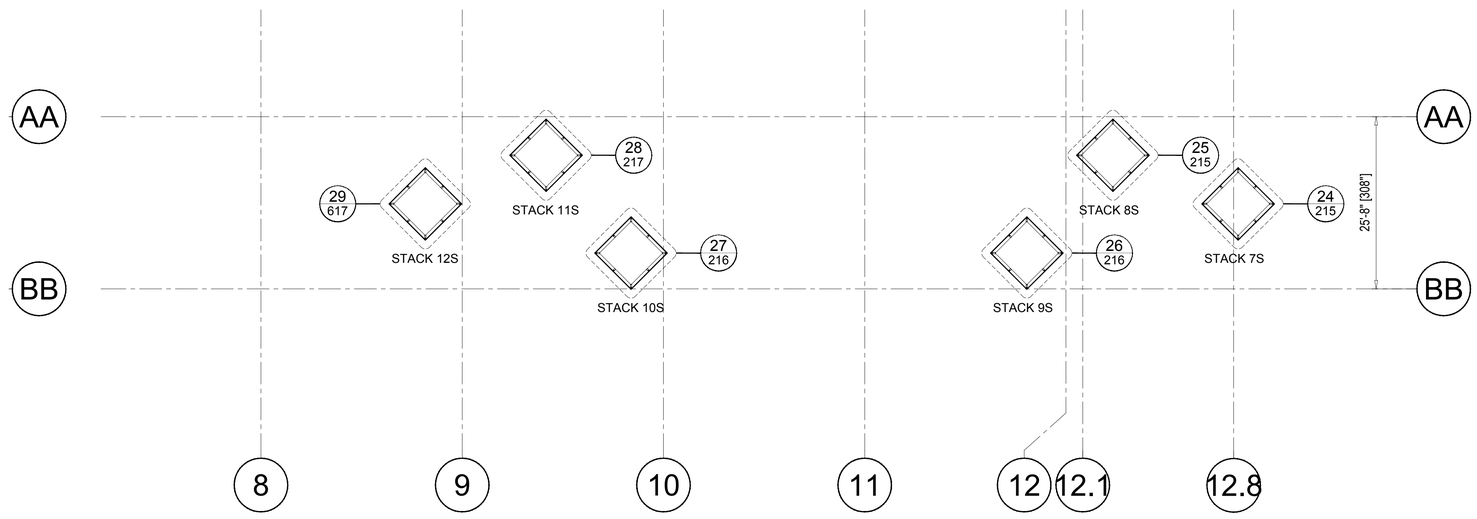


4 STACKS SOUTH OF LAKESIDE
ARCH. DETAIL REF: 1
ARCH. SHEET REF: A204N

LAKESIDE LEVEL EL-647'-8 $\frac{1}{2}$"

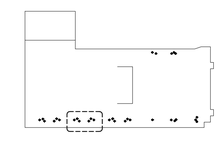

KEY PLAN

WWW.GARDNERMETAL.COM

LEGENDS

PROJECT

#337
CMMCC
MECH. STACKS
SHOP DRAWINGS

CUSTOMER
HARMON INC.
BOLINGBROOK IL

ARCHITECT
LMN ARCHITECTS
SEATTLE WASHINGTON

GENERAL CONTRACTOR
TURNER

SUBMITTALS

| NO | REV | DATE | DESCRIPTION |
|---|---|---|---|
| 1 | -- | 1/12/12 | 1ST SUBMITTAL |
| 2 | 1 | 3/21/12 | 2ND SUBMITTAL |
| 3 | 2 | 6/5/12 | FIELD & FILE |

CONTENTS: KEY PLAN
DWN: WP SCALE: 3/32" = 1'-0"

SHEET NUMBER
204

© 2010 GARDNER METAL SYSTEMS, INC. All Rights Reserved

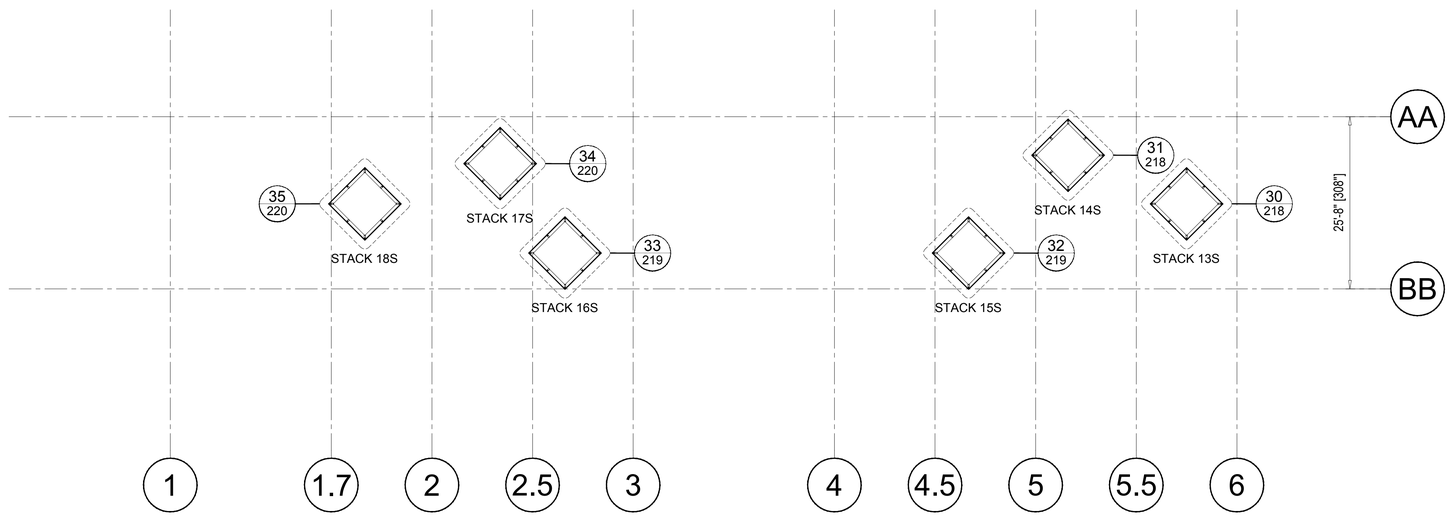


5 STACKS SOUTH OF LAKESIDE
ARCH. DETAIL REF: 1
ARCH. SHEET REF: A204U

LAKESIDE LEVEL EL-647'-8 $\frac{1}{2}$"

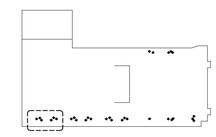

KEY PLAN

GMS
WWW.GARDNERMETAL.COM

LEGENDS

PROJECT
#337
CMMCC
MECH. STACKS
SHOP DRAWINGS

CUSTOMER
HARMON INC.
BOLINGBROOK IL

ARCHITECT
LMN ARCHITECTS
SEATTLE WASHINGTON

GENERAL CONTRACTOR
TURNER

SUBMITTALS

| NO | REV | DATE | DESCRIPTION |
|---|---|---|---|
| 1 | -- | 1/12/12 | 1ST SUBMITTAL |
| 2 | 1 | 3/21/12 | 2ND SUBMITTAL |
| 3 | 2 | 6/5/12 | FIELD & FILE |

CONTENTS: KEY PLAN
DWN: WP SCALE: 3/32" = 1'-0"

SHEET NUMBER
205

© 2010 GARDNER METAL SYSTEMS, INC. All Rights Reserved

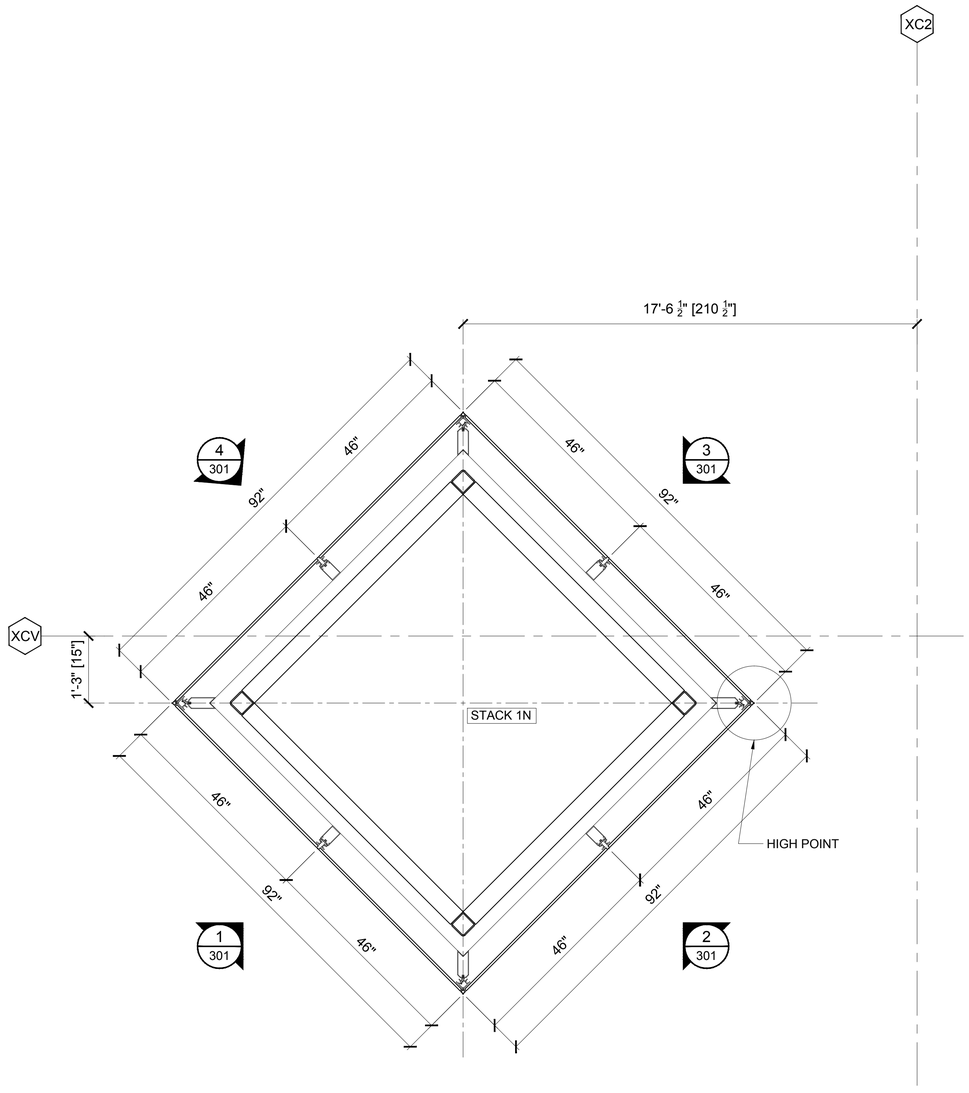


6 STACK 1N
ARCH. DETAIL REF:
ARCH. SHEET REF:

STACK NORTH OF LAKESIDE

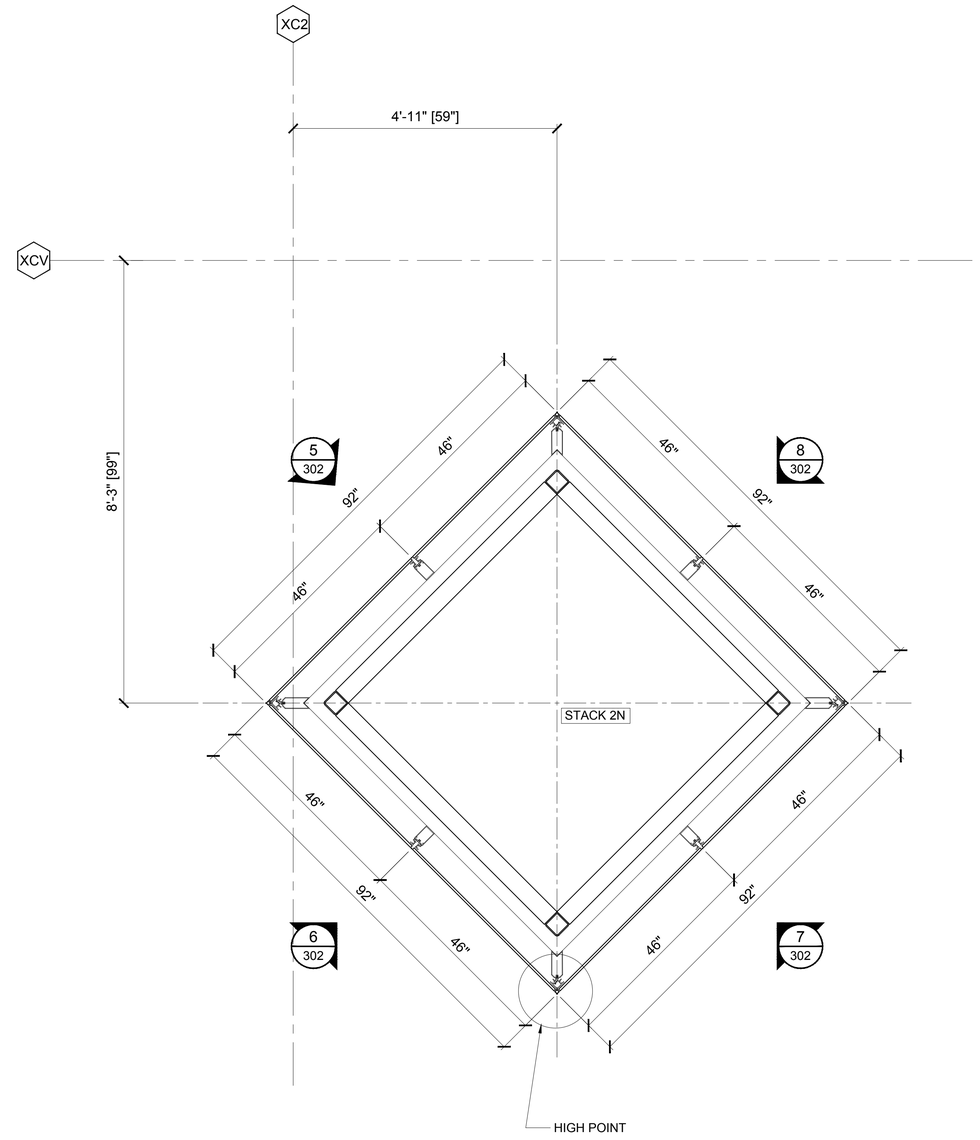


7 STACK 2N
ARCH. DETAIL REF:
ARCH. SHEET REF:

STACK NORTH OF LAKESIDE

GMS
WWW.GARDNERMETAL.COM

LEGENDS

PROJECT

#337
CMMCC
MECH. STACKS

SHOP DRAWINGS

CUSTOMER
HARMON INC.
BOLINGBROOK IL

ARCHITECT
LMN ARCHITECTS
SEATTLE WASHINGTON

GENERAL CONTRACTOR
TURNER

SUBMITTALS

| NO | REV | DATE | DESCRIPTION |
|---|---|---|---|
| 1 | -- | 1/12/12 | 1ST SUBMITTAL |
| 2 | 1 | 3/21/12 | 2ND SUBMITTAL |
| 3 | 2 | 6/5/12 | FIELD & FILE |

CONTENTS: STACK PLANS
DWN: WP SCALE: 3/4"=1'-0"

SHEET NUMBER
206

© 2010 GARDNER METAL SYSTEMS, INC. All Rights Reserved

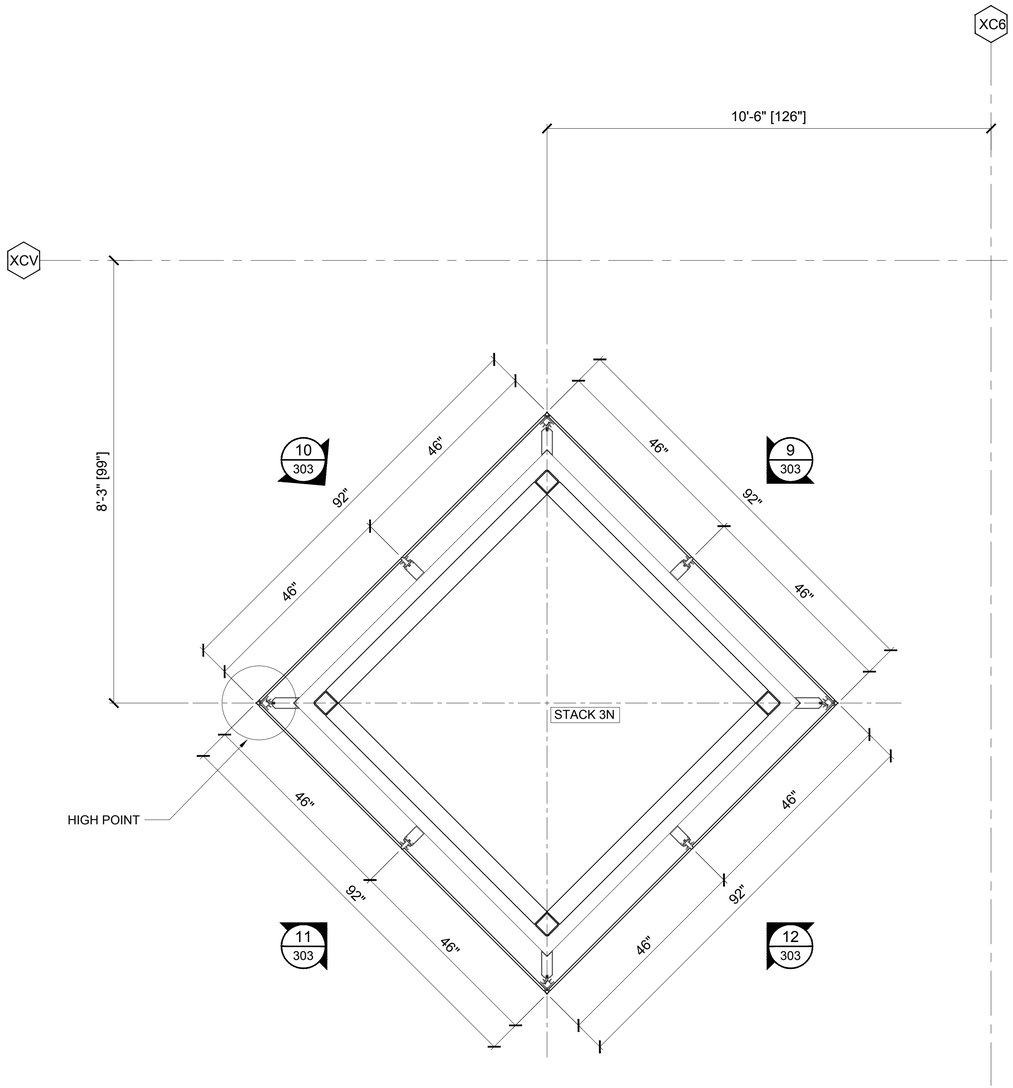


8 STACK 3N
ARCH. DETAIL REF:
ARCH. SHEET REF:
STACK NORTH OF LAKESIDE

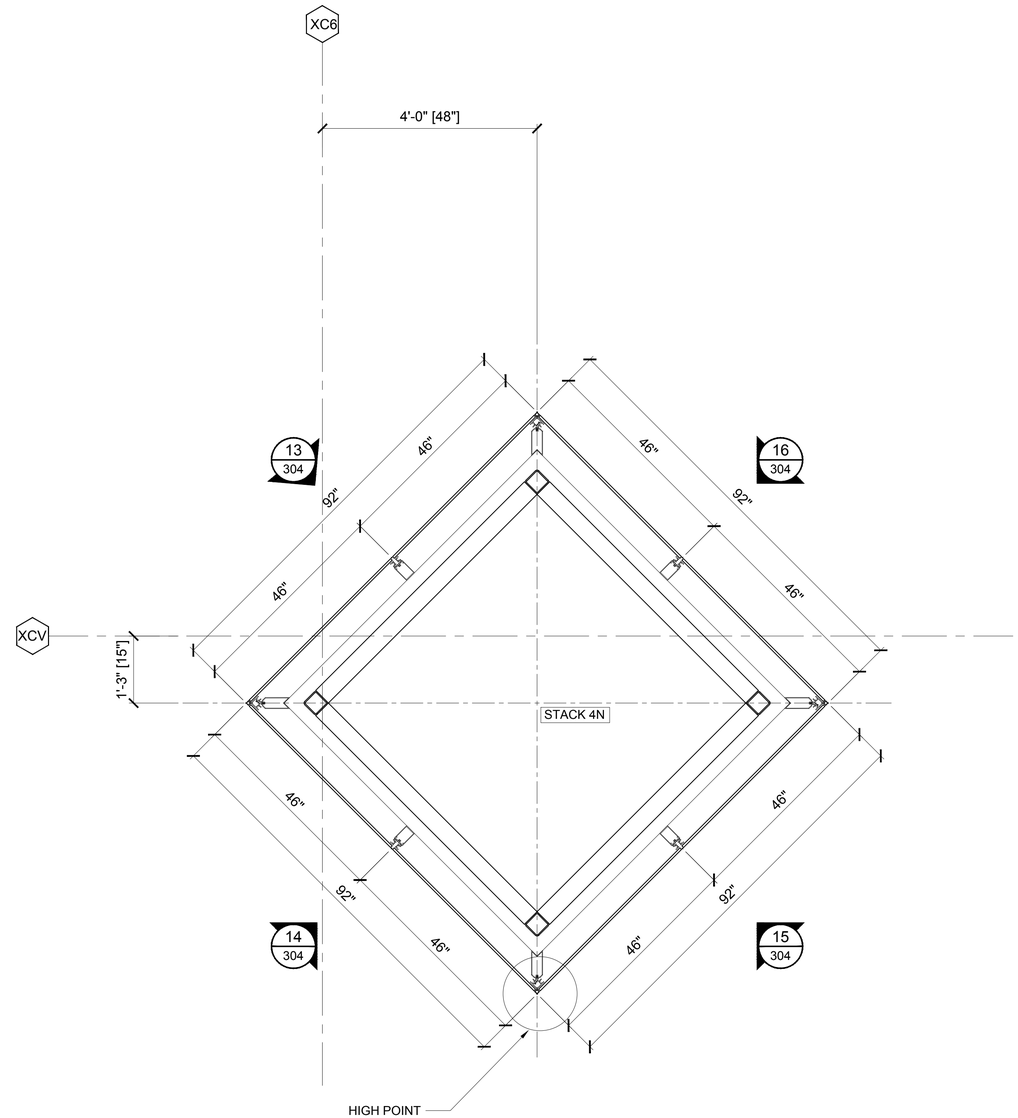


9 STACK 4N
ARCH. DETAIL REF:
ARCH. SHEET REF:
STACK NORTH OF LAKESIDE

GMS
WWW.GARDNERMETAL.COM

LEGENDS

PROJECT

#337
CMMCC
MECH. STACKS
SHOP DRAWINGS

CUSTOMER
HARMON INC.
BOLINGBROOK IL

ARCHITECT
LMN ARCHITECTS
SEATTLE WASHINGTON

GENERAL CONTRACTOR
TURNER

SUBMITTALS

| NO | REV | DATE | DESCRIPTION |
|---|---|---|---|
| 1 | -- | 1/12/12 | 1ST SUBMITTAL |
| 2 | 1 | 3/21/12 | 2ND SUBMITTAL |
| 3 | 2 | 6/5/12 | FIELD & FILE |

CONTENTS: STACK PLANS
DWN: WP SCALE: 3/4"=1'-0"

SHEET NUMBER
207

© 2010 GARDNER METAL SYSTEMS, INC. All Rights Reserved

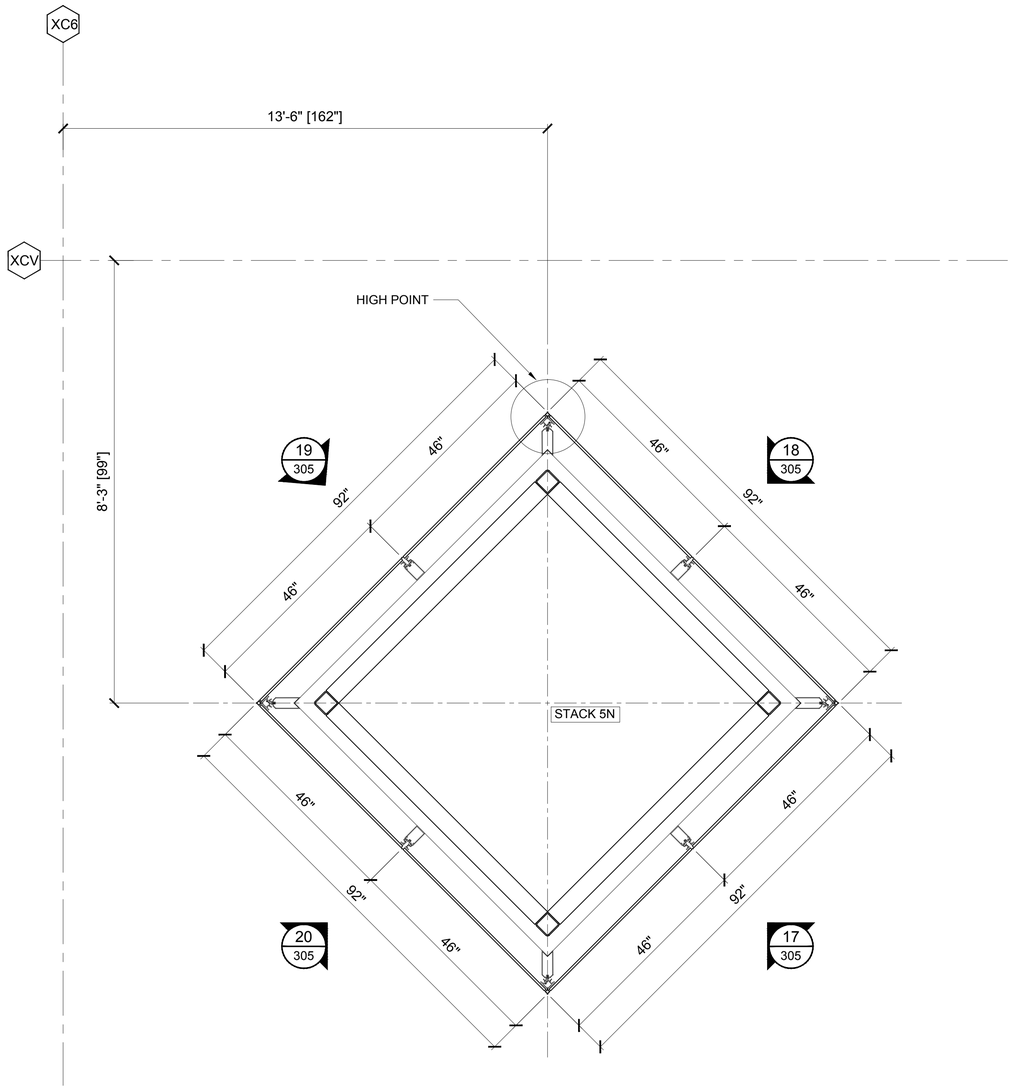


10 STACK 5N
ARCH. DETAIL REF:
ARCH. SHEET REF:
STACK NORTH OF LAKESIDE

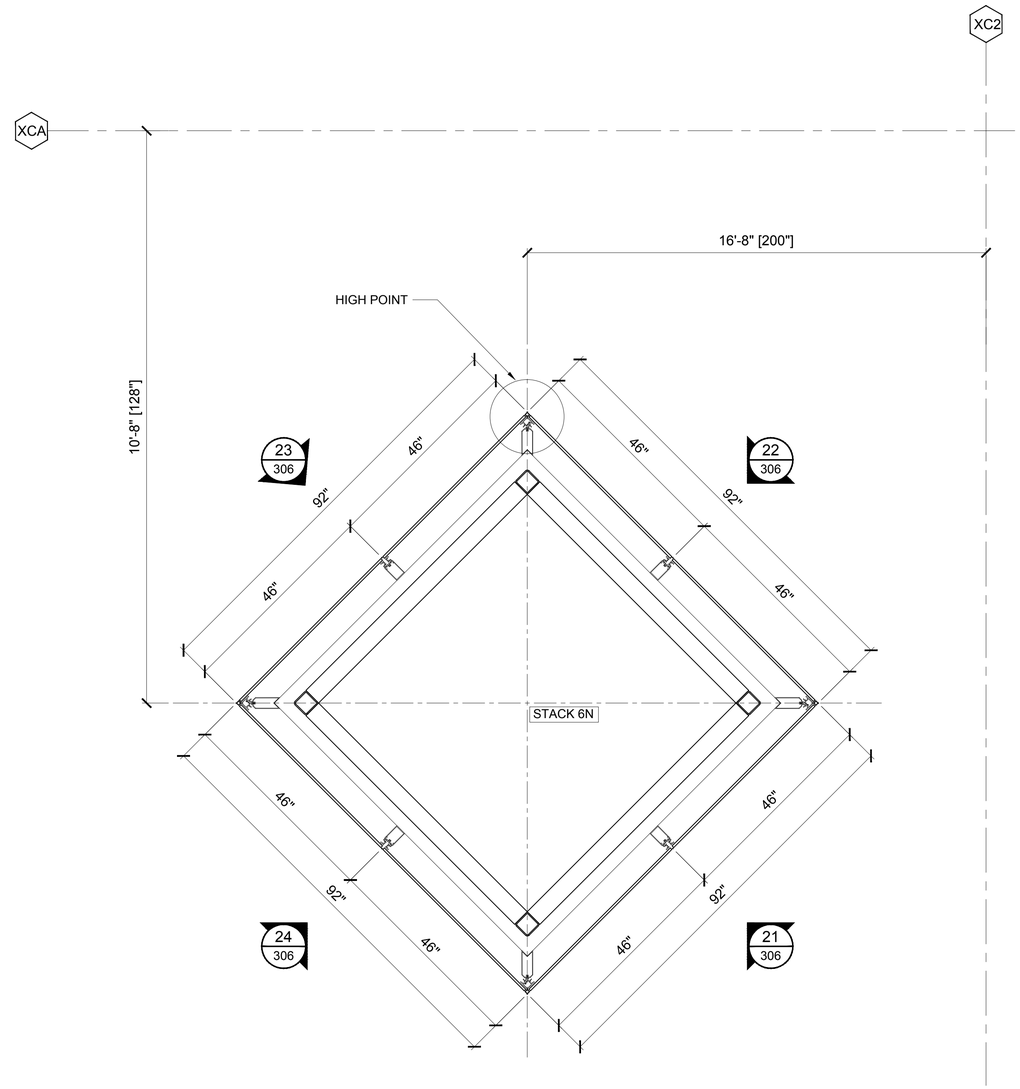


11 STACK 6N
ARCH. DETAIL REF:
ARCH. SHEET REF:
STACK NORTH OF LAKESIDE

GMS
WWW.GARDNERMETAL.COM

LEGENDS

PROJECT

#337
CMMCC
MECH. STACKS
SHOP DRAWINGS

CUSTOMER
HARMON INC.
BOLINGBROOK IL

ARCHITECT
LMN ARCHITECTS
SEATTLE WASHINGTON

GENERAL CONTRACTOR
TURNER

SUBMITTALS

| NO | REV | DATE | DESCRIPTION |
|---|---|---|---|
| 1 | -- | 1/12/12 | 1ST SUBMITTAL |
| 2 | 1 | 3/21/12 | 2ND SUBMITTAL |
| 3 | 2 | 6/5/12 | FIELD & FILE |

CONTENTS: STACK PLANS
DWN: WP SCALE: 3/4"=1'-0"

SHEET NUMBER
208

© 2010 GARDNER METAL SYSTEMS, INC. All Rights Reserved

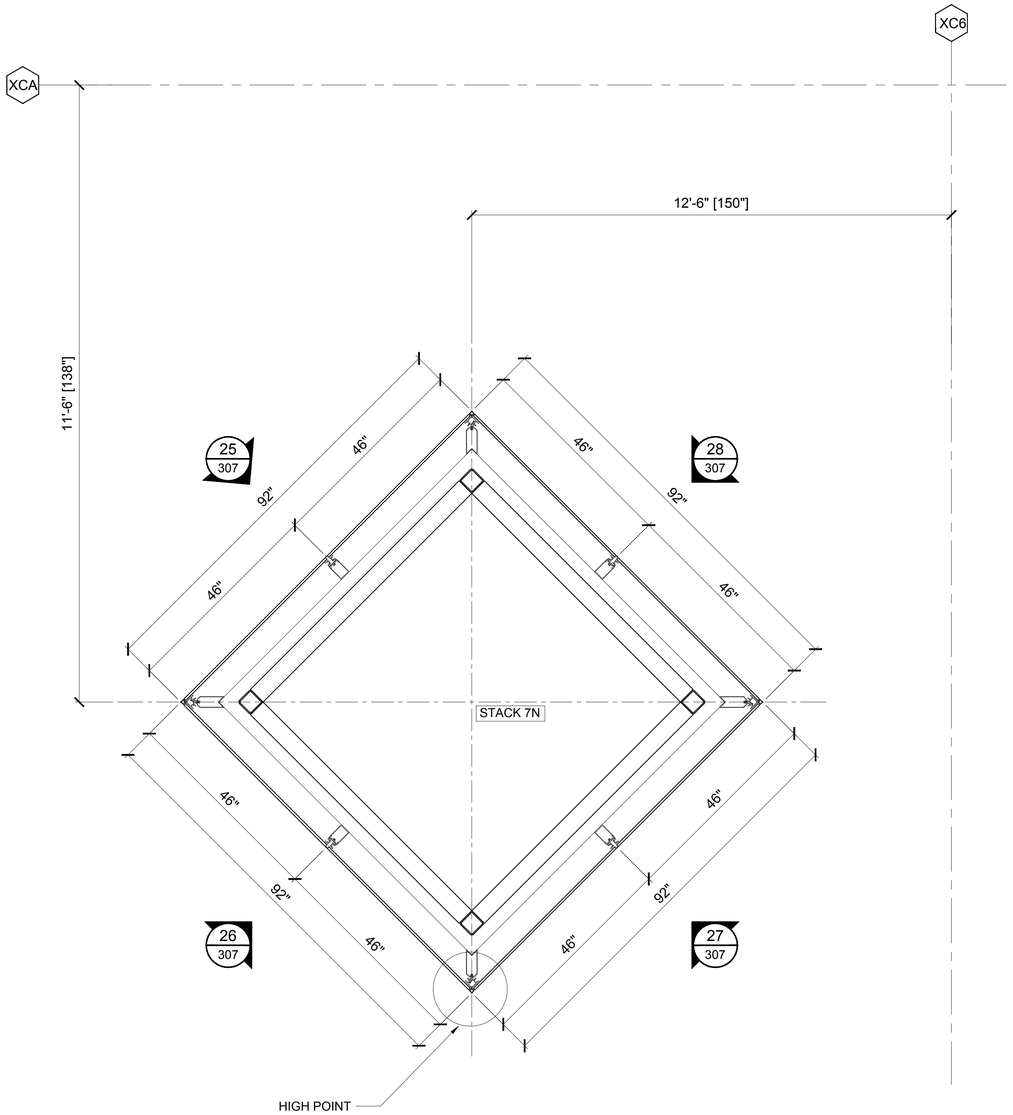


12 STACK 7N
ARCH. DETAIL REF:
ARCH. SHEET REF:
STACK NORTH OF LAKESIDE

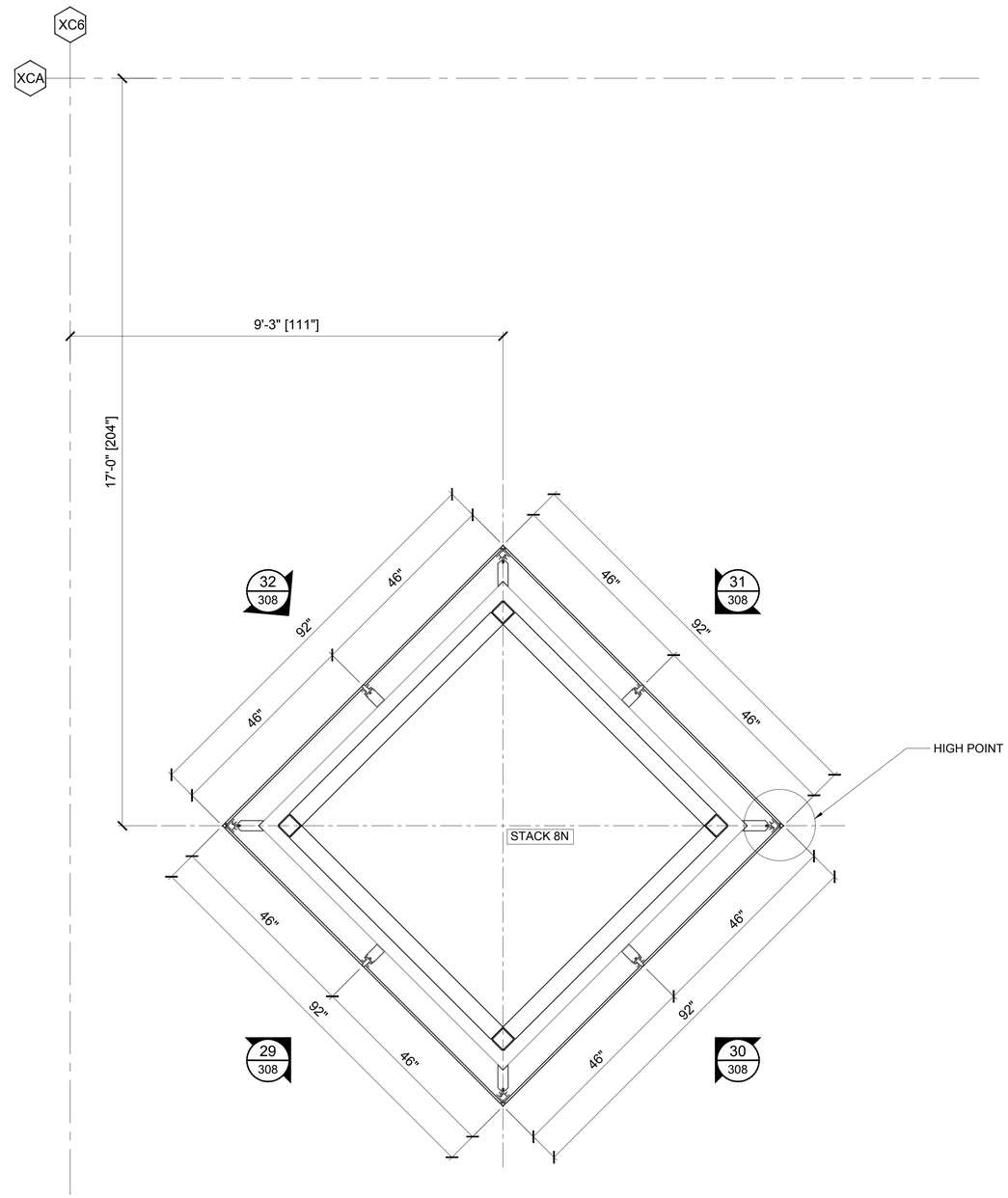


13 STACK 8N
ARCH. DETAIL REF:
ARCH. SHEET REF:
STACK NORTH OF LAKESIDE

GMS
WWW.GARDNERMETAL.COM

LEGENDS

PROJECT

#337
CMMCC
MECH. STACKS

SHOP DRAWINGS

CUSTOMER
HARMON INC.
BOLINGBROOK IL

ARCHITECT
LMN ARCHITECTS
SEATTLE WASHINGTON

GENERAL CONTRACTOR
TURNER

SUBMITTALS

| NO | REV | DATE | DESCRIPTION |
|---|---|---|---|
| 1 | -- | 1/12/12 | 1ST SUBMITTAL |
| 2 | 1 | 3/21/12 | 2ND SUBMITTAL |
| 3 | 2 | 6/5/12 | FIELD & FILE |

CONTENTS: STACK PLANS
DWN: WP SCALE: 3/4"=1'-0"

SHEET NUMBER
209

© 2010 GARDNER METAL SYSTEMS, INC. All Rights Reserved

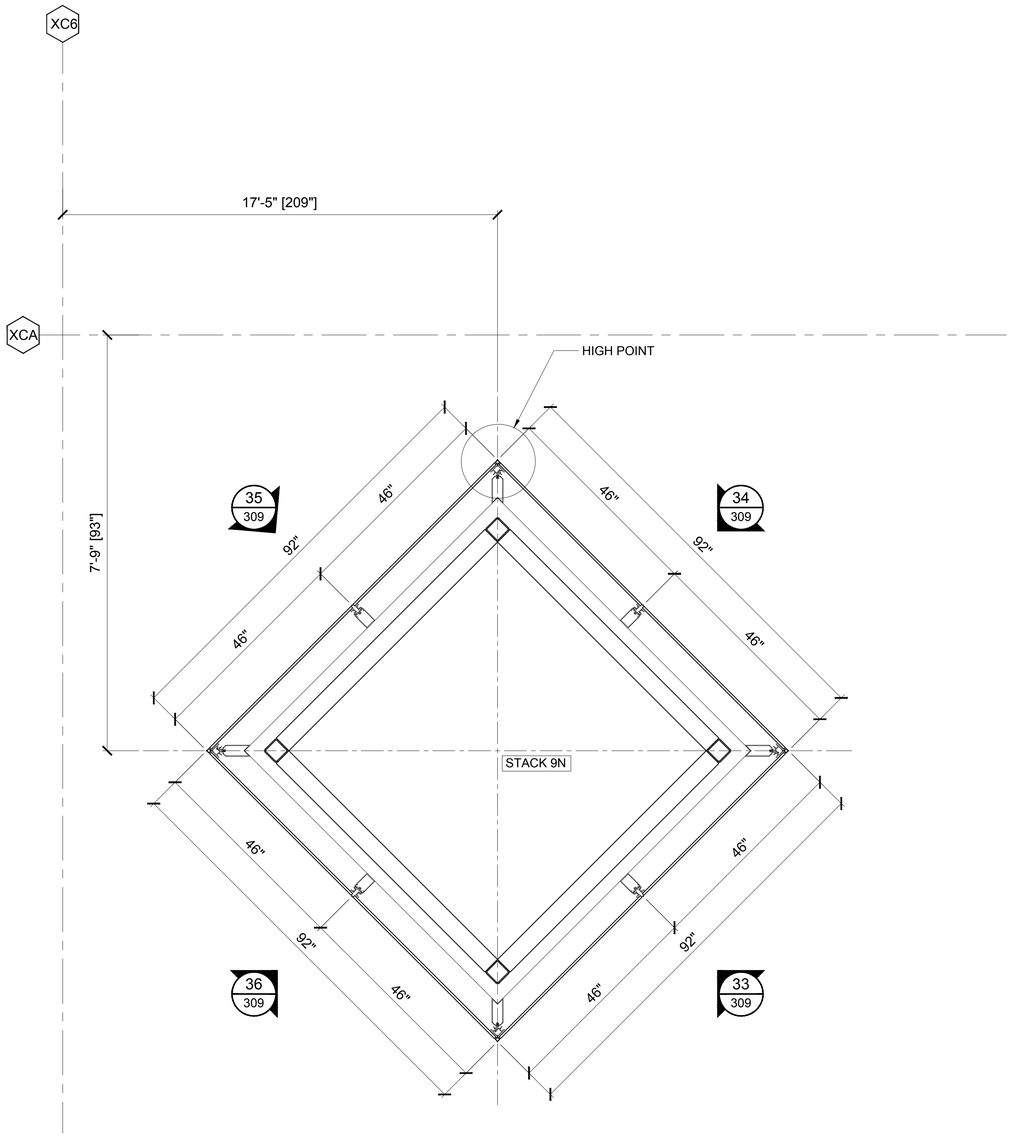


14 STACK 9N
ARCH. DETAIL REF:
ARCH. SHEET REF:
STACK NORTH OF LAKESIDE

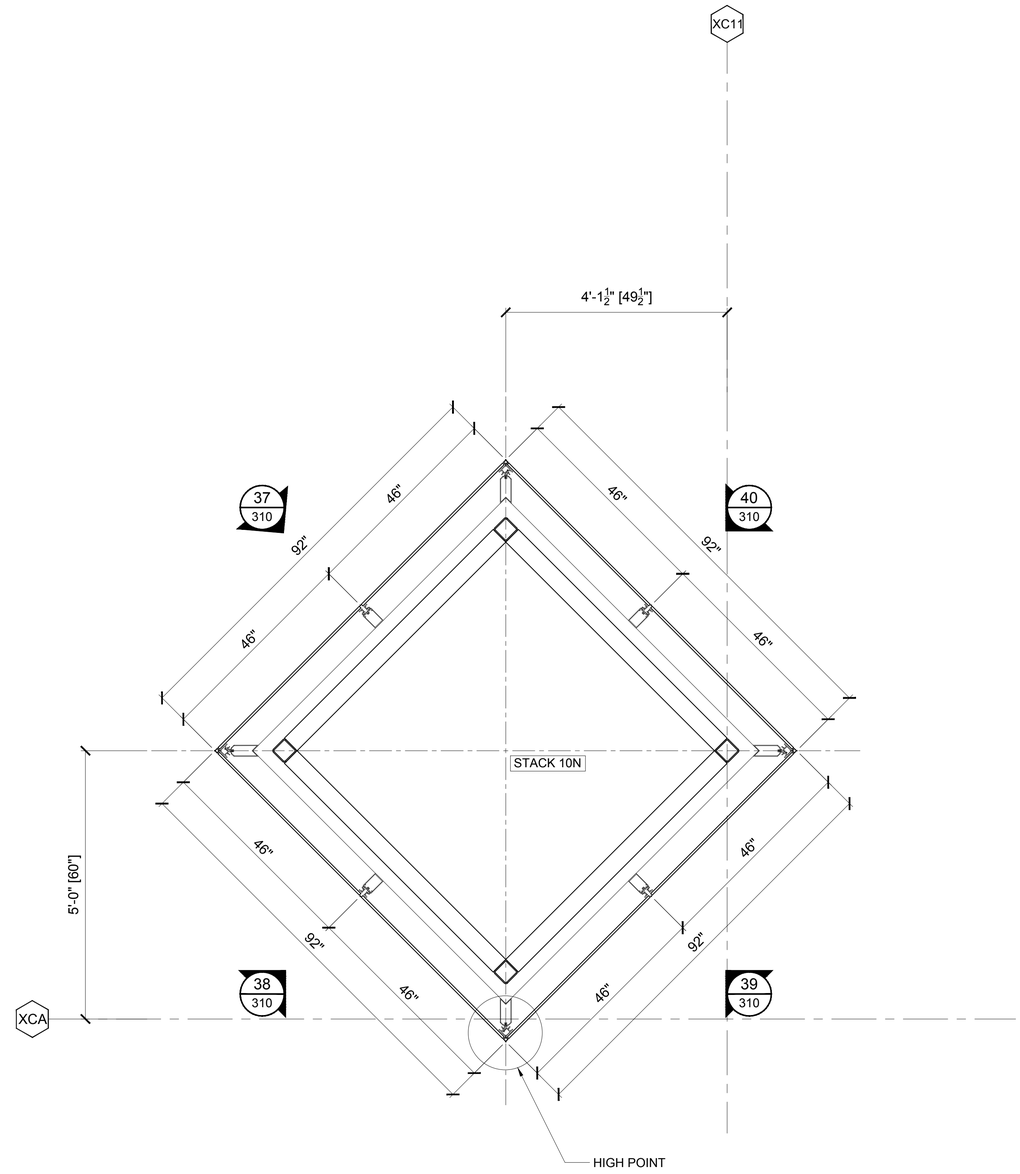


15 STACK 10N
ARCH. DETAIL REF:
ARCH. SHEET REF:
STACK NORTH OF LAKESIDE

GMS
WWW.GARDNERMETAL.COM

LEGENDS

PROJECT

#337
CMMCC
MECH. STACKS
SHOP DRAWINGS

CUSTOMER
HARMON INC.
BOLINGBROOK IL

ARCHITECT
LMN ARCHITECTS
SEATTLE WASHINGTON

GENERAL CONTRACTOR
TURNER

SUBMITTALS

| NO | REV | DATE | DESCRIPTION |
|---|---|---|---|
| 1 | -- | 1/12/12 | 1ST SUBMITTAL |
| 2 | 1 | 3/21/12 | 2ND SUBMITTAL |
| 3 | 2 | 6/5/12 | FIELD & FILE |

CONTENTS: STACK PLANS
DWN: WP SCALE: 3/4"=1'-0"

SHEET NUMBER
210

© 2010 GARDNER METAL SYSTEMS, INC. All Rights Reserved

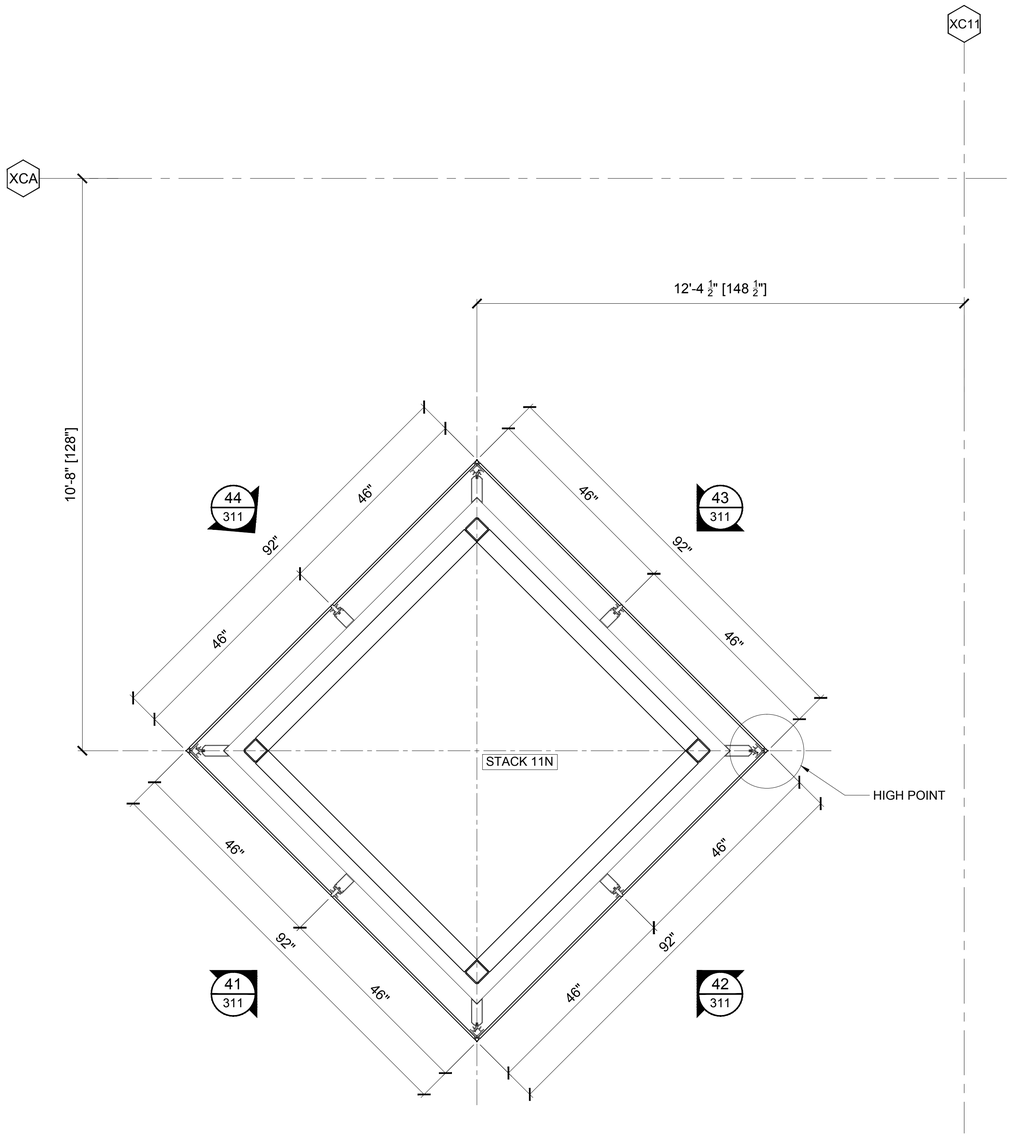


16 STACK 11N
ARCH. DETAIL REF:
ARCH. SHEET REF:
STACK NORTH OF LAKESIDE

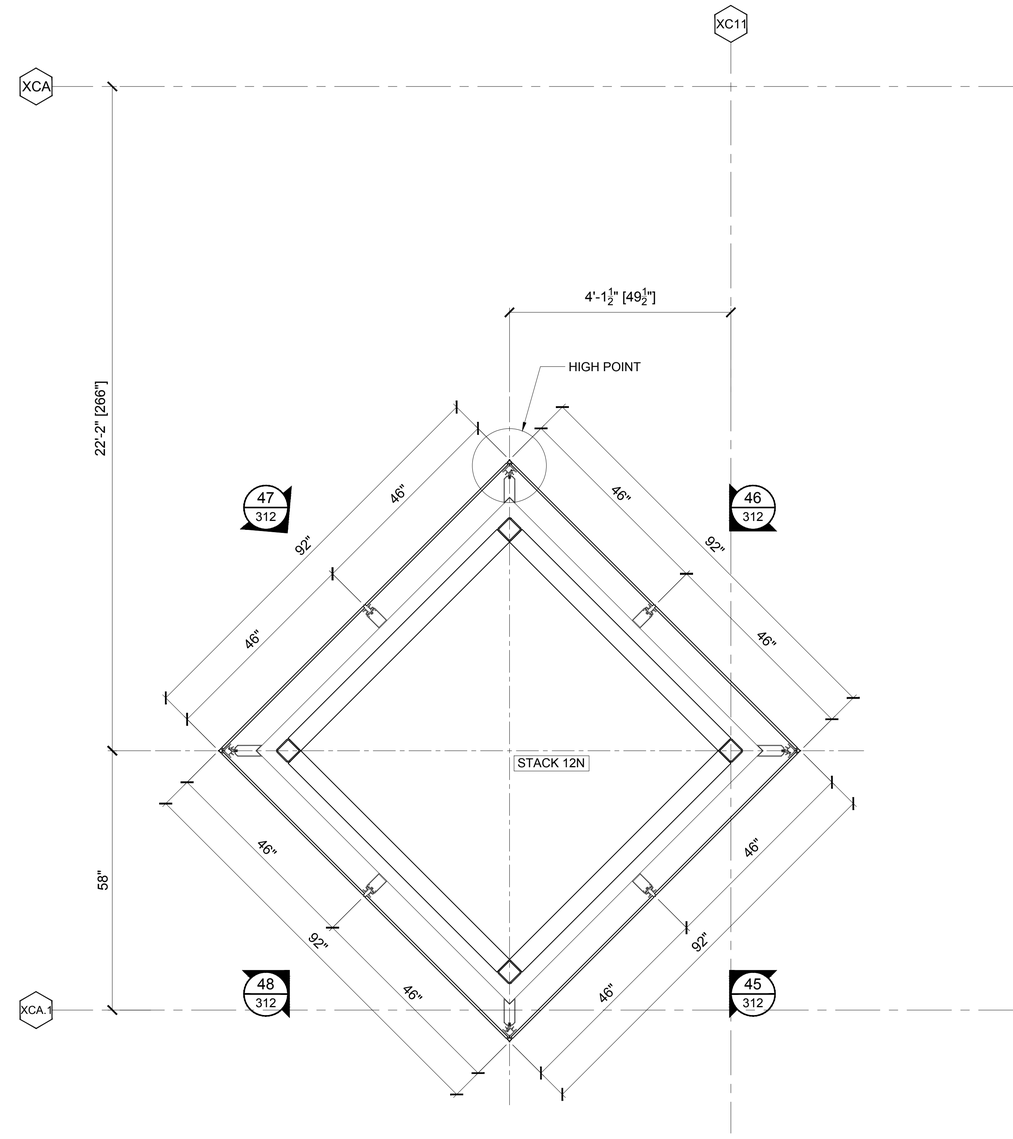


17 STACK 12N
ARCH. DETAIL REF:
ARCH. SHEET REF:
STACK NORTH OF LAKESIDE

GMS
WWW.GARDNERMETAL.COM

LEGENDS

PROJECT

#337
CMMCC
MECH. STACKS
SHOP DRAWINGS

CUSTOMER
HARMON INC.
BOLINGBROOK IL

ARCHITECT
LMN ARCHITECTS
SEATTLE WASHINGTON

GENERAL CONTRACTOR
TURNER

SUBMITTALS

| NO | REV | DATE | DESCRIPTION |
|---|---|---|---|
| 1 | -- | 1/12/12 | 1ST SUBMITTAL |
| 2 | 1 | 3/21/12 | 2ND SUBMITTAL |
| 3 | 2 | 6/5/12 | FIELD & FILE |

CONTENTS: STACK PLANS
DWN: WP SCALE: 3/4"=1'-0"

SHEET NUMBER
211

© 2010 GARDNER METAL SYSTEMS, INC. All Rights Reserved

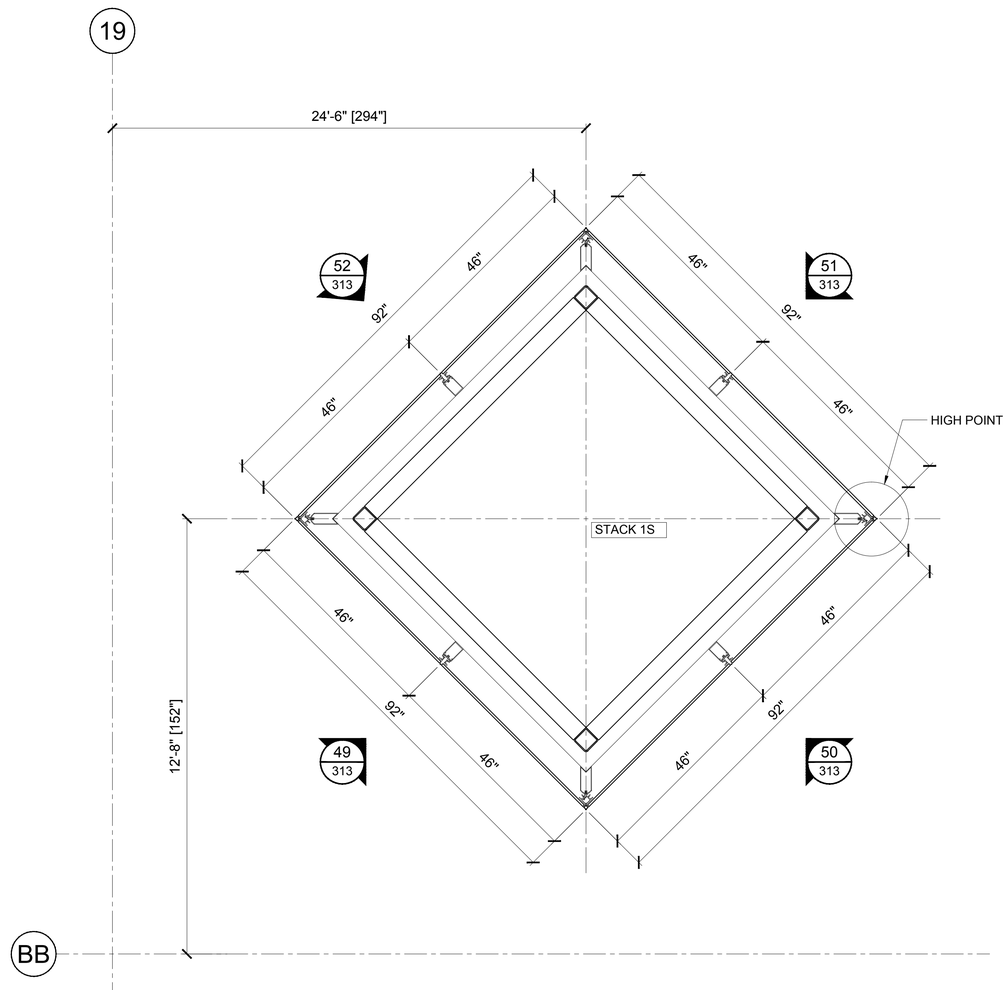


18 STACK 1S
ARCH. DETAIL REF:
ARCH. SHEET REF:
STACK SOUTH OF LAKESIDE

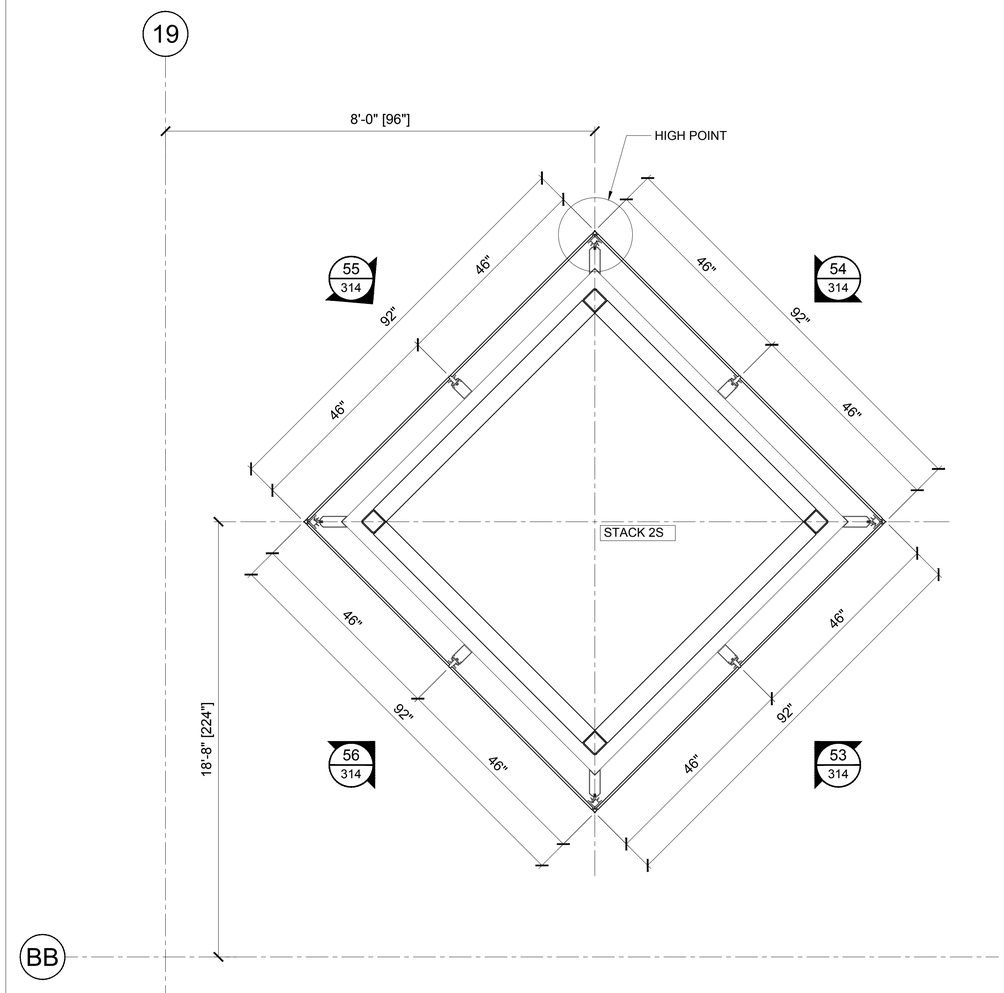


19 STACK 2S
ARCH. DETAIL REF:
ARCH. SHEET REF:
STACK SOUTH OF LAKESIDE

GMS
WWW.GARDNERMETAL.COM

LEGENDS

PROJECT

#337
CMMCC
MECH. STACKS
SHOP DRAWINGS

CUSTOMER
HARMON INC.
BOLINGBROOK IL

ARCHITECT
LMN ARCHITECTS
SEATTLE WASHINGTON

GENERAL CONTRACTOR
TURNER

SUBMITTALS

| NO | REV | DATE | DESCRIPTION |
|---|---|---|---|
| 1 | -- | 1/12/12 | 1ST SUBMITTAL |
| 2 | 1 | 3/21/12 | 2ND SUBMITTAL |
| 3 | 2 | 6/5/12 | FIELD & FILE |

CONTENTS: STACK PLANS
DWN: WP SCALE: 3/4"=1'-0"

SHEET NUMBER
212

© 2010 GARDNER METAL SYSTEMS, INC. All Rights Reserved

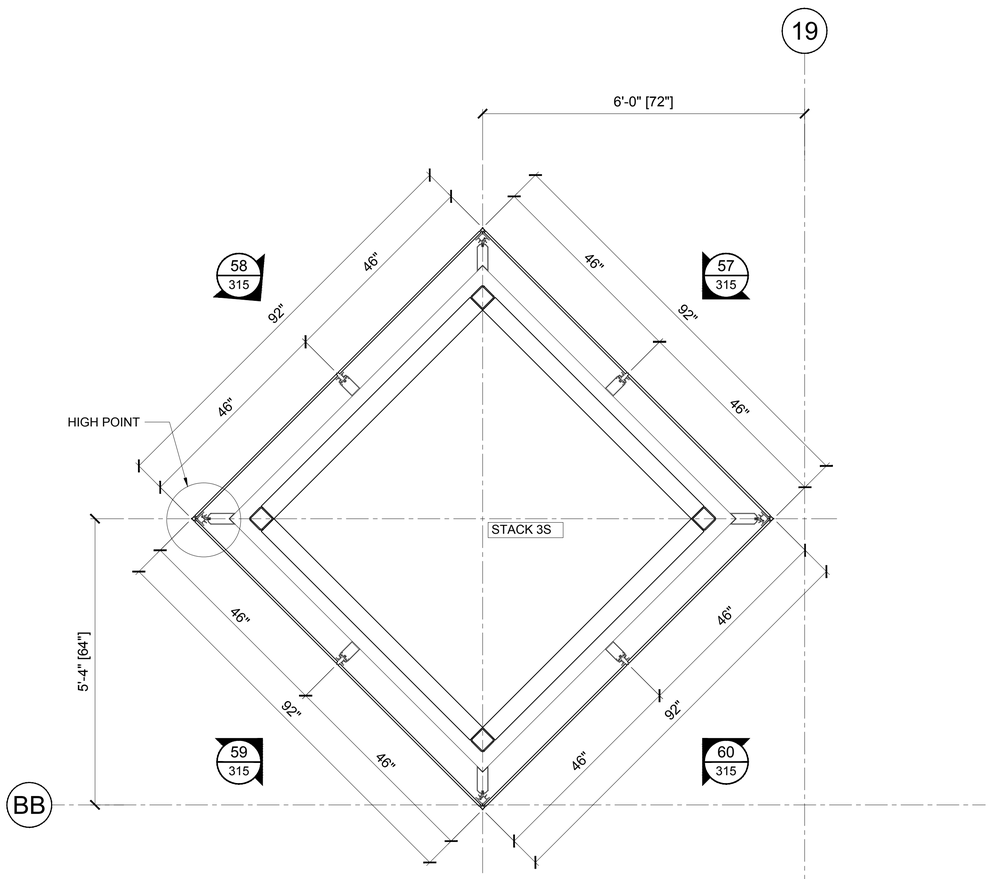


20 STACK 3S
ARCH. DETAIL REF:
ARCH. SHEET REF:
STACK SOUTH OF LAKESIDE

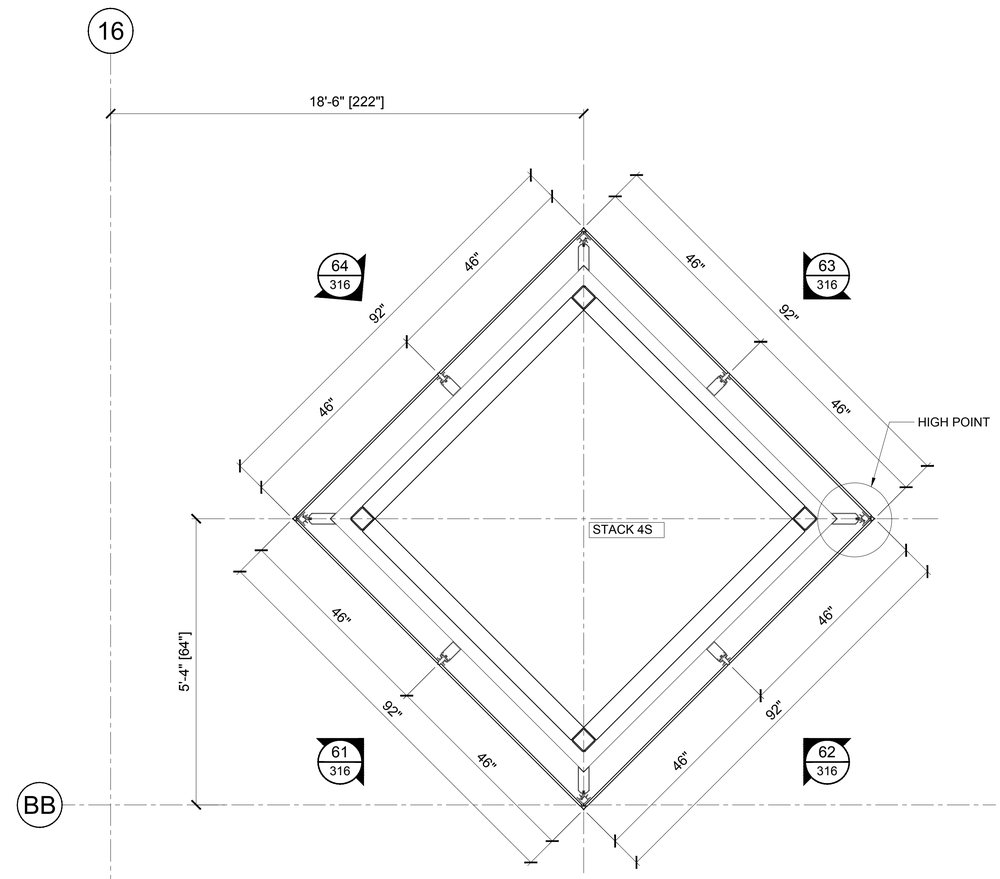


21 STACK 4S
ARCH. DETAIL REF:
ARCH. SHEET REF:
STACK SOUTH OF LAKESIDE

GMS
WWW.GARDNERMETAL.COM

LEGENDS

PROJECT

#337
CMMCC
MECH. STACKS

SHOP DRAWINGS

CUSTOMER
HARMON INC.
BOLINGBROOK IL

ARCHITECT
LMN ARCHITECTS
SEATTLE WASHINGTON

GENERAL CONTRACTOR
TURNER

SUBMITTALS

| NO | REV | DATE | DESCRIPTION |
|---|---|---|---|
| 1 | -- | 1/12/12 | 1ST SUBMITTAL |
| 2 | 1 | 3/21/12 | 2ND SUBMITTAL |
| 3 | 2 | 6/5/12 | FIELD & FILE |
| | | | |

CONTENTS: STACK PLANS
DWN: WP SCALE: 3/4"=1'-0"

SHEET NUMBER
213

© 2010 GARDNER METAL SYSTEMS, INC. All Rights Reserved

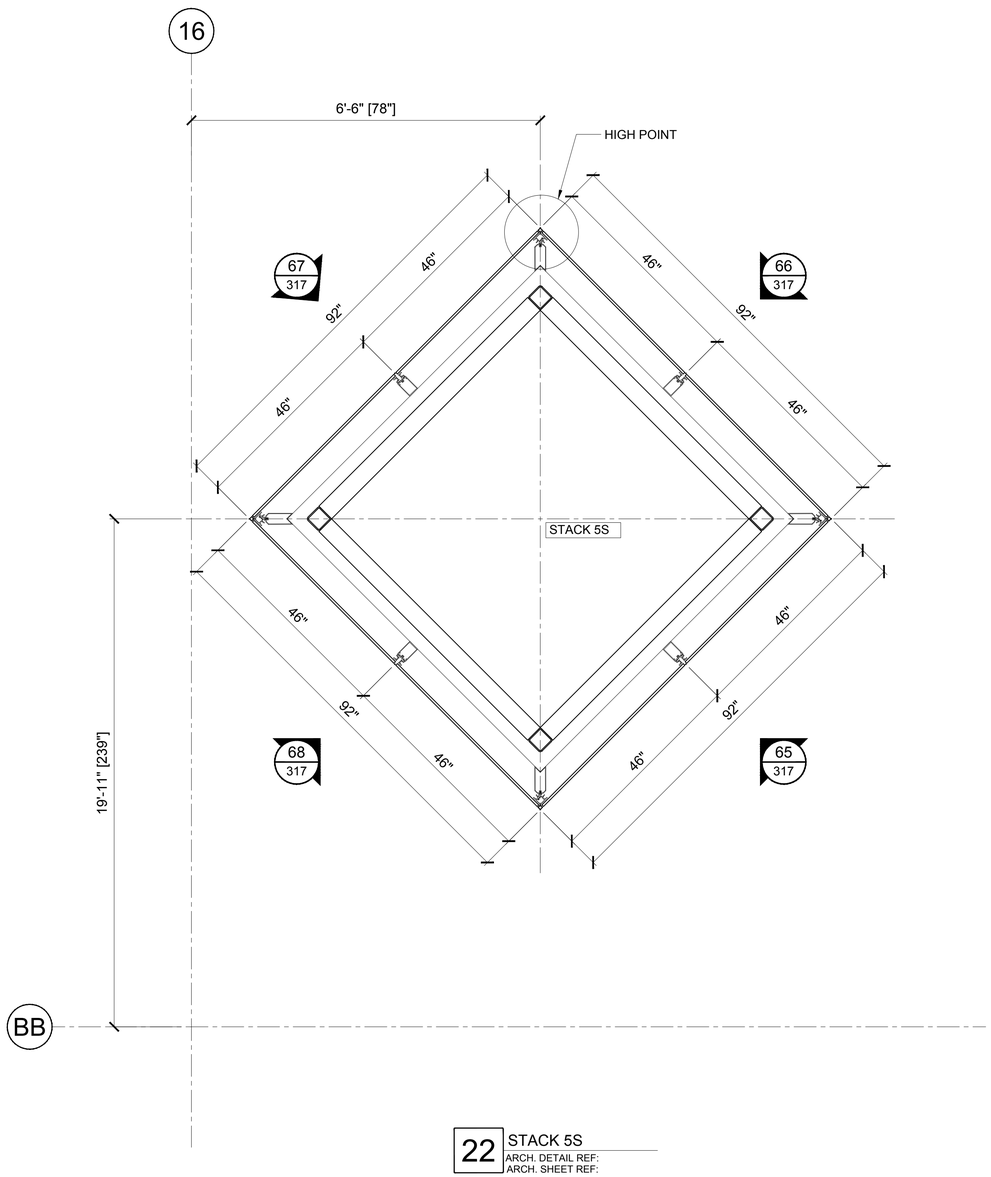


22 STACK 5S
ARCH. DETAIL REF:
ARCH. SHEET REF:
STACK SOUTH OF LAKESIDE

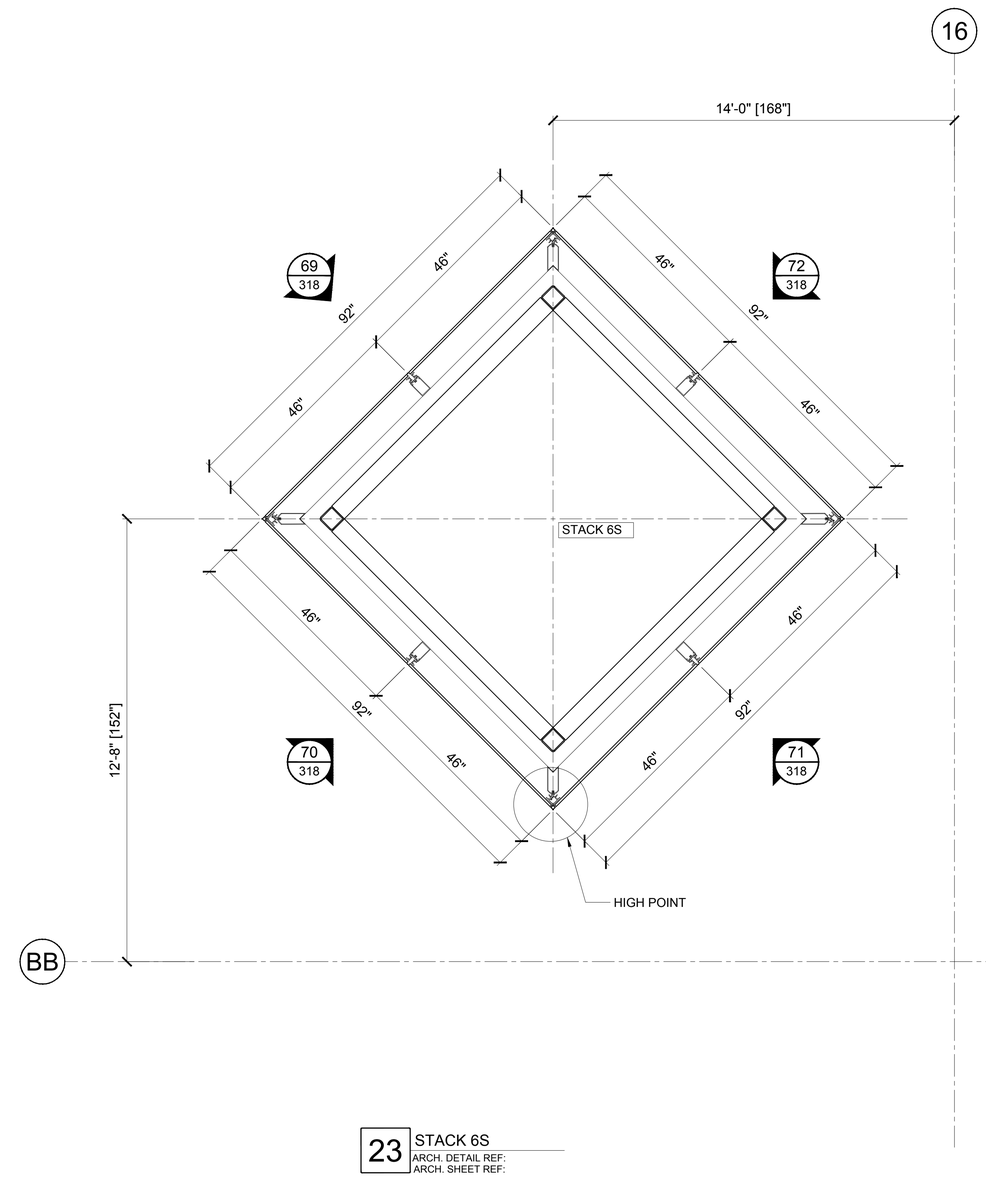


23 STACK 6S
ARCH. DETAIL REF:
ARCH. SHEET REF:
STACK SOUTH OF LAKESIDE

GMS
WWW.GARDNERMETAL.COM

LEGENDS

PROJECT
#337
CMMCC
MECH. STACKS
SHOP DRAWINGS

CUSTOMER
HARMON INC.
BOLINGBROOK IL

ARCHITECT
LMN ARCHITECTS
SEATTLE WASHINGTON

GENERAL CONTRACTOR
TURNER

SUBMITTALS

| NO | REV | DATE | DESCRIPTION |
|---|---|---|---|
| 1 | -- | 1/12/12 | 1ST SUBMITTAL |
| 2 | 1 | 3/21/12 | 2ND SUBMITTAL |
| 3 | 2 | 6/5/12 | FIELD & FILE |

CONTENTS: STACK PLANS
DWN: WP SCALE: 3/4"=1'-0"

SHEET NUMBER
214

© 2010 GARDNER METAL SYSTEMS, INC. All Rights Reserved

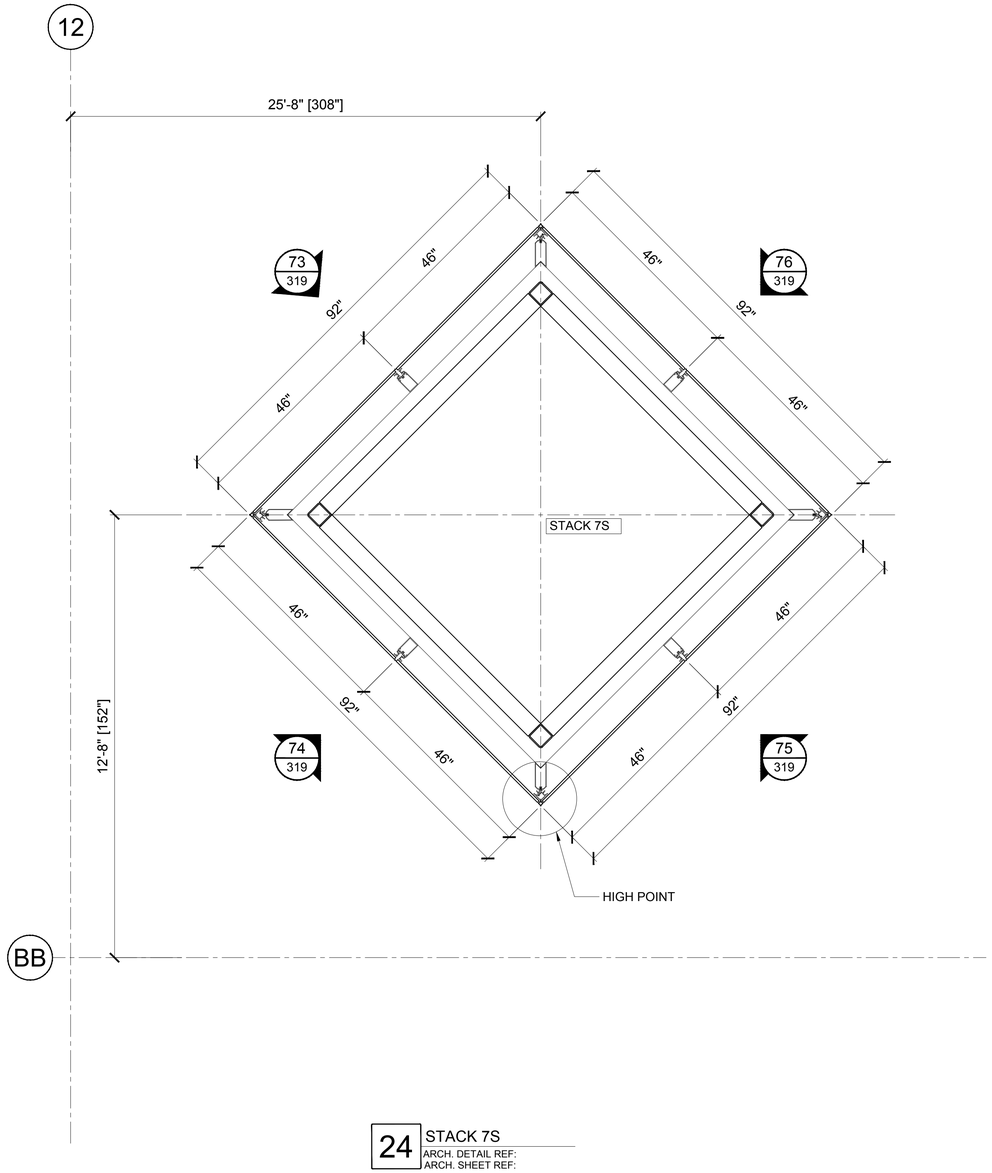


24 STACK 7S
ARCH. DETAIL REF:
ARCH. SHEET REF:
STACK SOUTH OF LAKESIDE

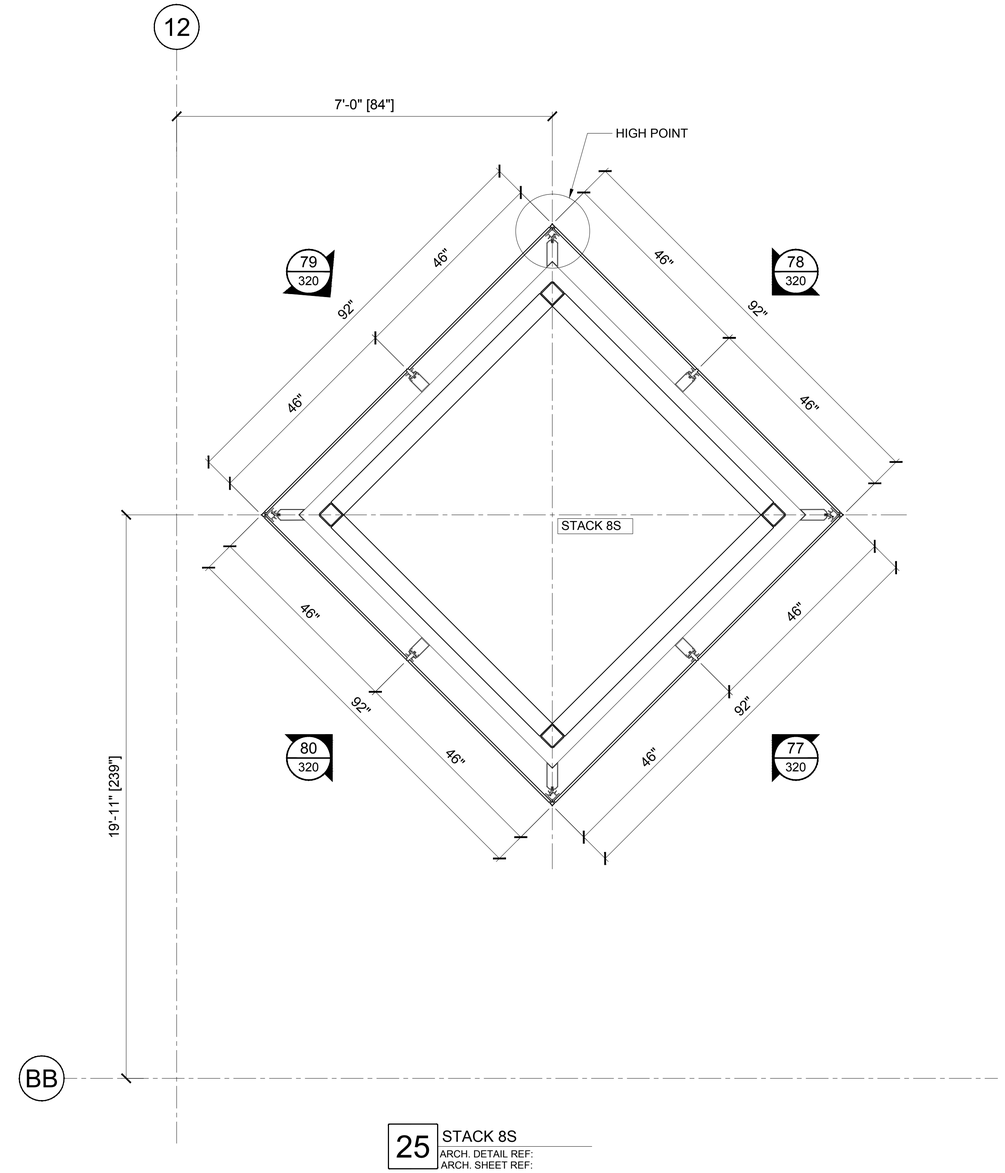


25 STACK 8S
ARCH. DETAIL REF:
ARCH. SHEET REF:
STACK SOUTH OF LAKESIDE

GMS
WWW.GARDNERMETAL.COM

LEGENDS

PROJECT

#337
CMMCC
MECH. STACKS
SHOP DRAWINGS

CUSTOMER
HARMON INC.
BOLINGBROOK IL

ARCHITECT
LMN ARCHITECTS
SEATTLE WASHINGTON

GENERAL CONTRACTOR
TURNER

SUBMITTALS

| NO | REV | DATE | DESCRIPTION |
|---|---|---|---|
| 1 | -- | 1/12/12 | 1ST SUBMITTAL |
| 2 | 1 | 3/21/12 | 2ND SUBMITTAL |
| 3 | 2 | 6/5/12 | FIELD & FILE |

CONTENTS: STACK PLANS
DWN: WP SCALE: 3/4"=1'-0"

SHEET NUMBER
215

© 2010 GARDNER METAL SYSTEMS, INC. All Rights Reserved

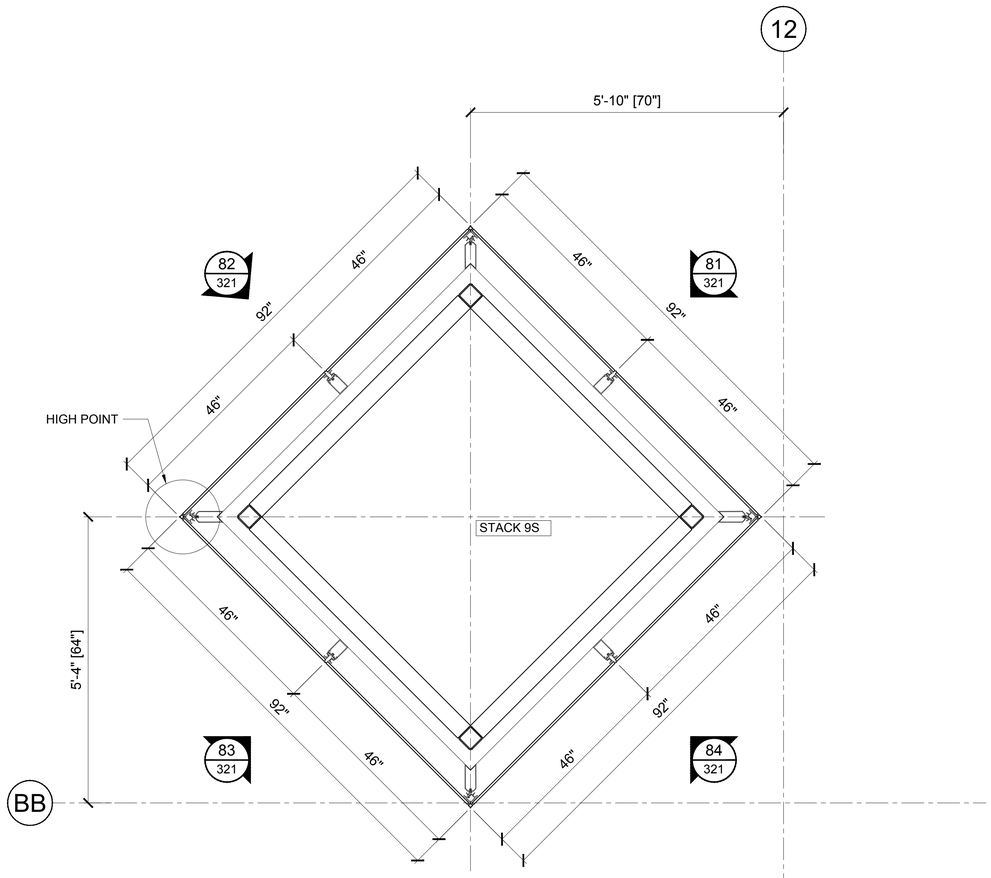


26 STACK 9S
ARCH. DETAIL REF:
ARCH. SHEET REF:
STACK SOUTH OF LAKESIDE

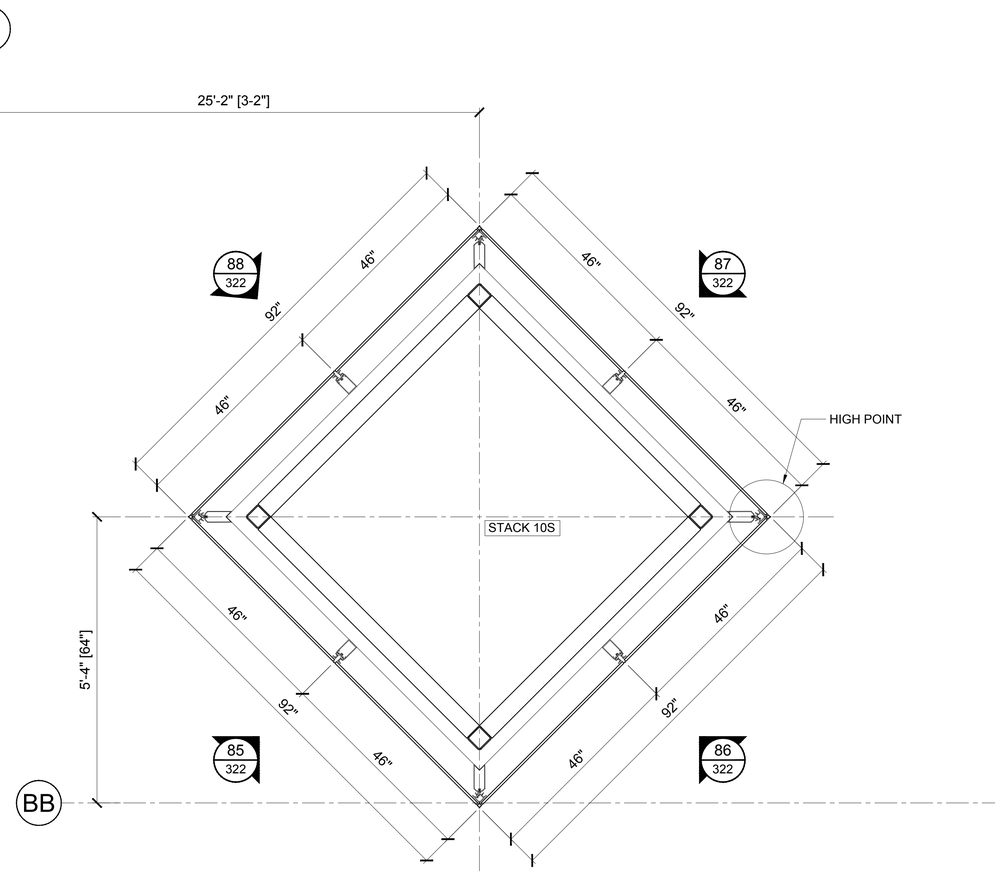


27 STACK 10S
ARCH. DETAIL REF:
ARCH. SHEET REF:
STACK SOUTH OF LAKESIDE

GMS
WWW.GARDNERMETAL.COM

LEGENDS

PROJECT

#337
CMMCC
MECH. STACKS
SHOP DRAWINGS

CUSTOMER
HARMON INC.
BOLINGBROOK IL

ARCHITECT
LMN ARCHITECTS
SEATTLE WASHINGTON

GENERAL CONTRACTOR
TURNER

SUBMITTALS

| NO | REV | DATE | DESCRIPTION |
|---|---|---|---|
| 1 | -- | 1/12/12 | 1ST SUBMITTAL |
| 2 | 1 | 3/21/12 | 2ND SUBMITTAL |
| 3 | 2 | 6/5/12 | FIELD & FILE |

CONTENTS: STACK PLANS
DWN: WP SCALE: 3/4"=1'-0"

SHEET NUMBER
216

© 2010 GARDNER METAL SYSTEMS, INC. All Rights Reserved

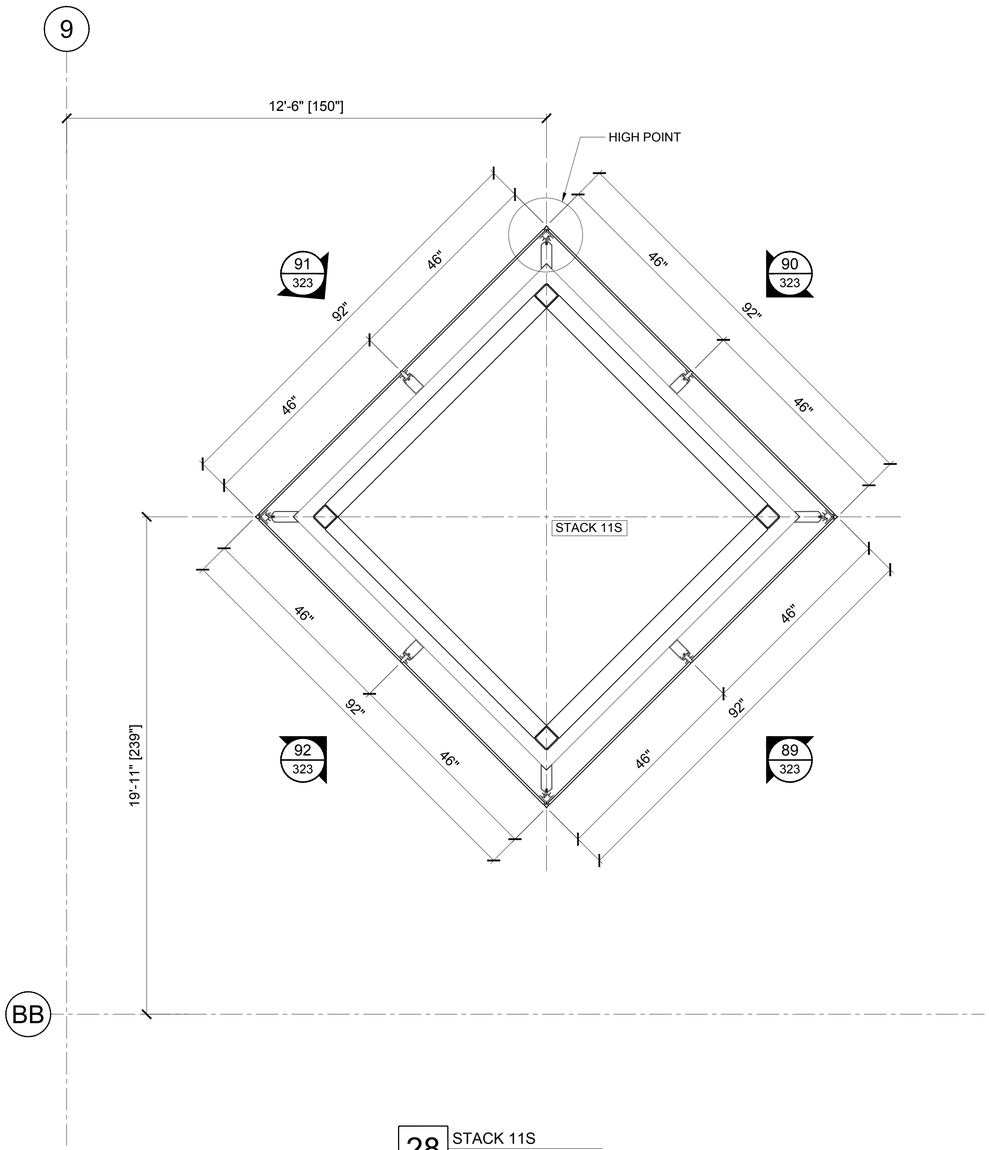


28 STACK 11S
ARCH. DETAIL REF:
ARCH. SHEET REF:
STACK SOUTH OF LAKESIDE

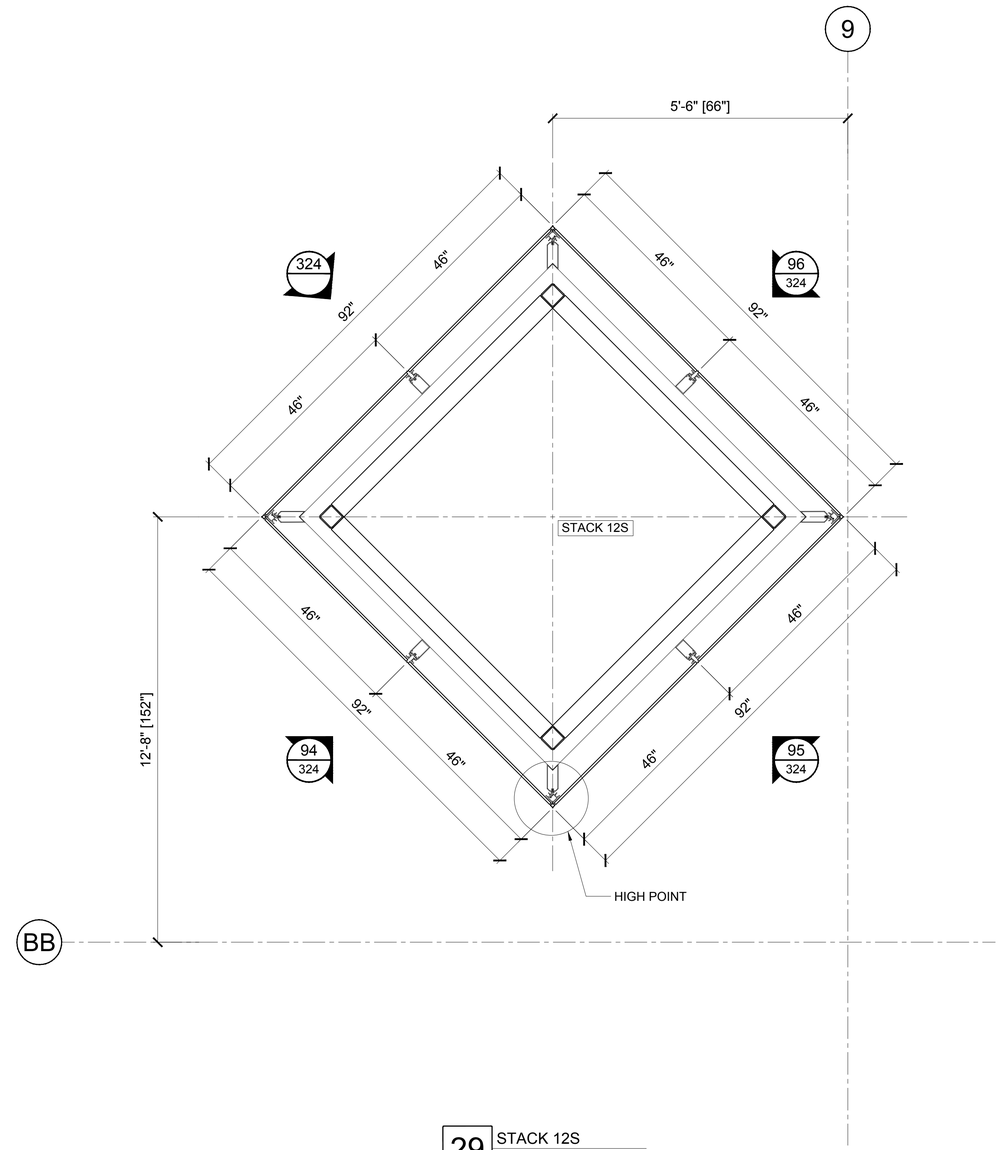


29 STACK 12S
ARCH. DETAIL REF:
ARCH. SHEET REF:
STACK SOUTH OF LAKESIDE

GMS
WWW.GARDNERMETAL.COM

LEGENDS

PROJECT

#337
CMMCC
MECH. STACKS
SHOP DRAWINGS

CUSTOMER
HARMON INC.
BOLINGBROOK IL

ARCHITECT
LMN ARCHITECTS
SEATTLE WASHINGTON

GENERAL CONTRACTOR
TURNER

SUBMITTALS

| NO | REV | DATE | DESCRIPTION |
|---|---|---|---|
| 1 | -- | 1/12/12 | 1ST SUBMITTAL |
| 2 | 1 | 3/21/12 | 2ND SUBMITTAL |
| 3 | 2 | 6/5/12 | FIELD & FILE |

CONTENTS: STACK PLANS
DWN: WP SCALE: 3/4"=1'-0"

SHEET NUMBER
217

© 2010 GARDNER METAL SYSTEMS, INC. All Rights Reserved

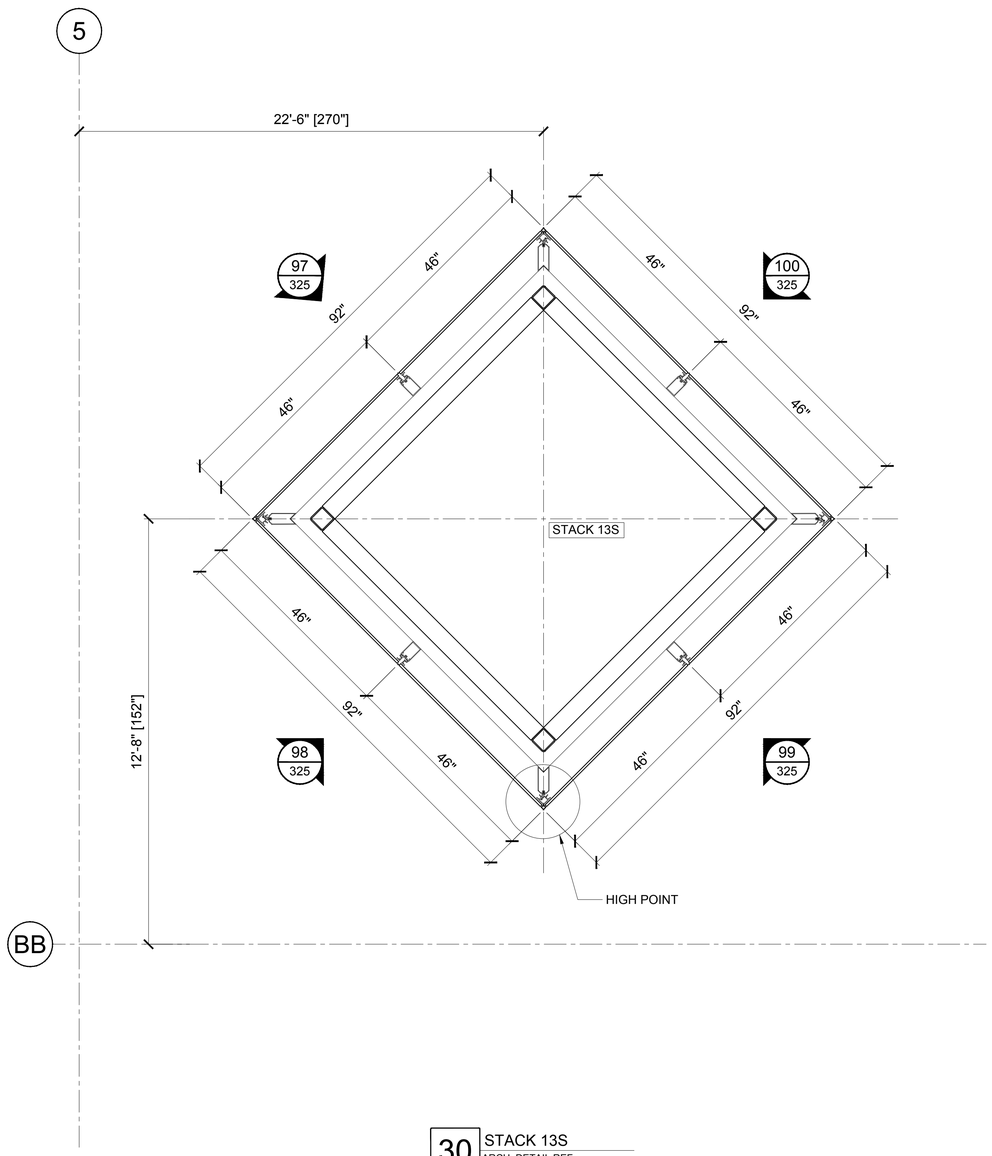


30 STACK 13S
ARCH. DETAIL REF:
ARCH. SHEET REF:
STACK SOUTH OF LAKESIDE

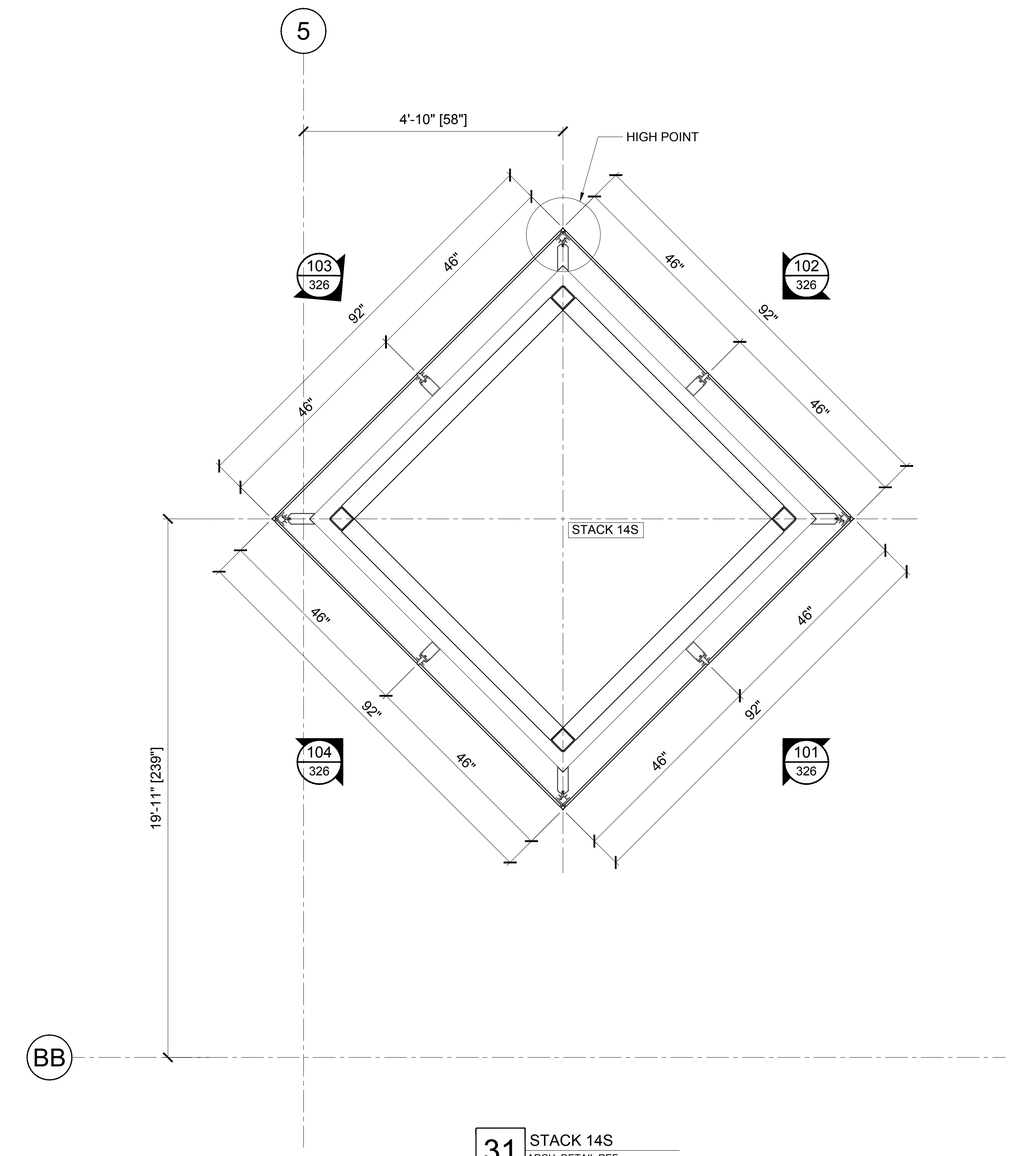


31 STACK 14S
ARCH. DETAIL REF:
ARCH. SHEET REF:
STACK SOUTH OF LAKESIDE

GMS
WWW.GARDNERMETAL.COM

LEGENDS

PROJECT
#337
CMMCC
MECH. STACKS
SHOP DRAWINGS

CUSTOMER
HARMON INC.
BOLINGBROOK IL

ARCHITECT
LMN ARCHITECTS
SEATTLE WASHINGTON

GENERAL CONTRACTOR
TURNER

SUBMITTALS

| NO | REV | DATE | DESCRIPTION |
|---|---|---|---|
| 1 | -- | 1/12/12 | 1ST SUBMITTAL |
| 2 | 1 | 3/21/12 | 2ND SUBMITTAL |
| 3 | 2 | 6/5/12 | FIELD & FILE |

CONTENTS: STACK PLANS
DWN: WP SCALE: 3/4"=1'-0"

SHEET NUMBER
218

© 2010 GARDNER METAL SYSTEMS, INC. All Rights Reserved

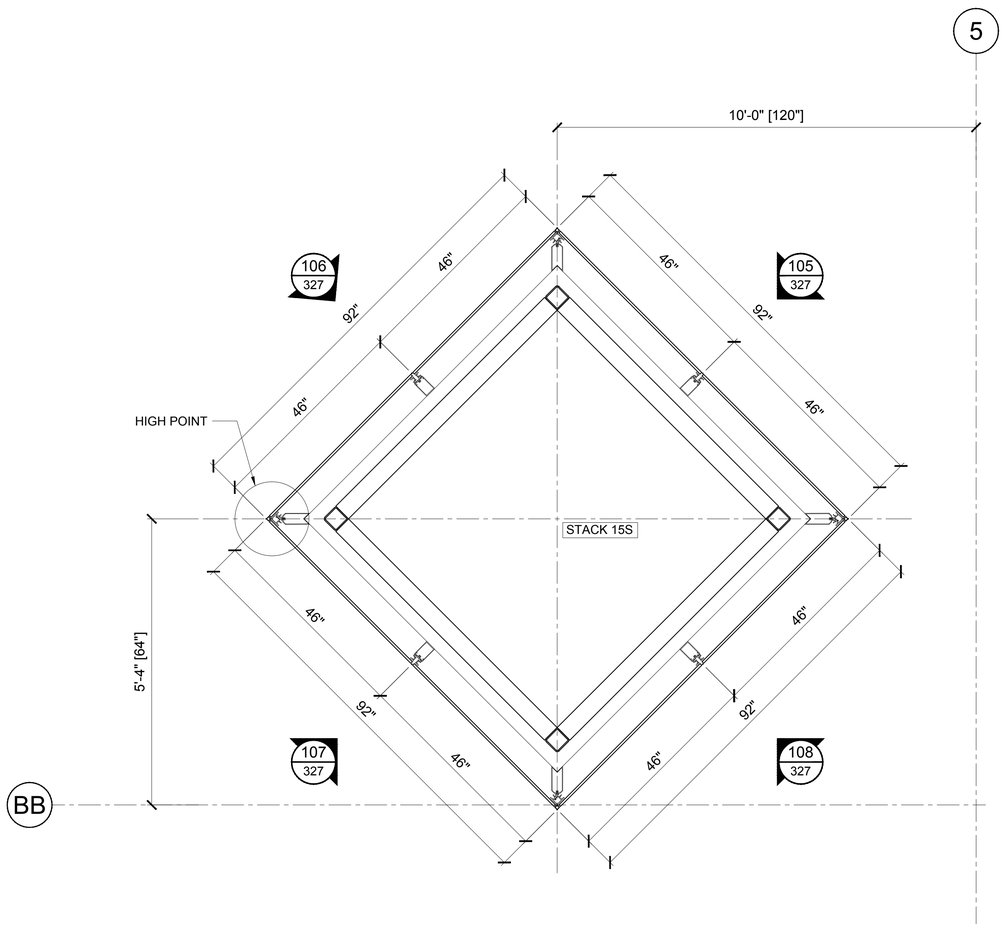


32 STACK 15S
ARCH. DETAIL REF:
ARCH. SHEET REF:
STACK SOUTH OF LAKESIDE

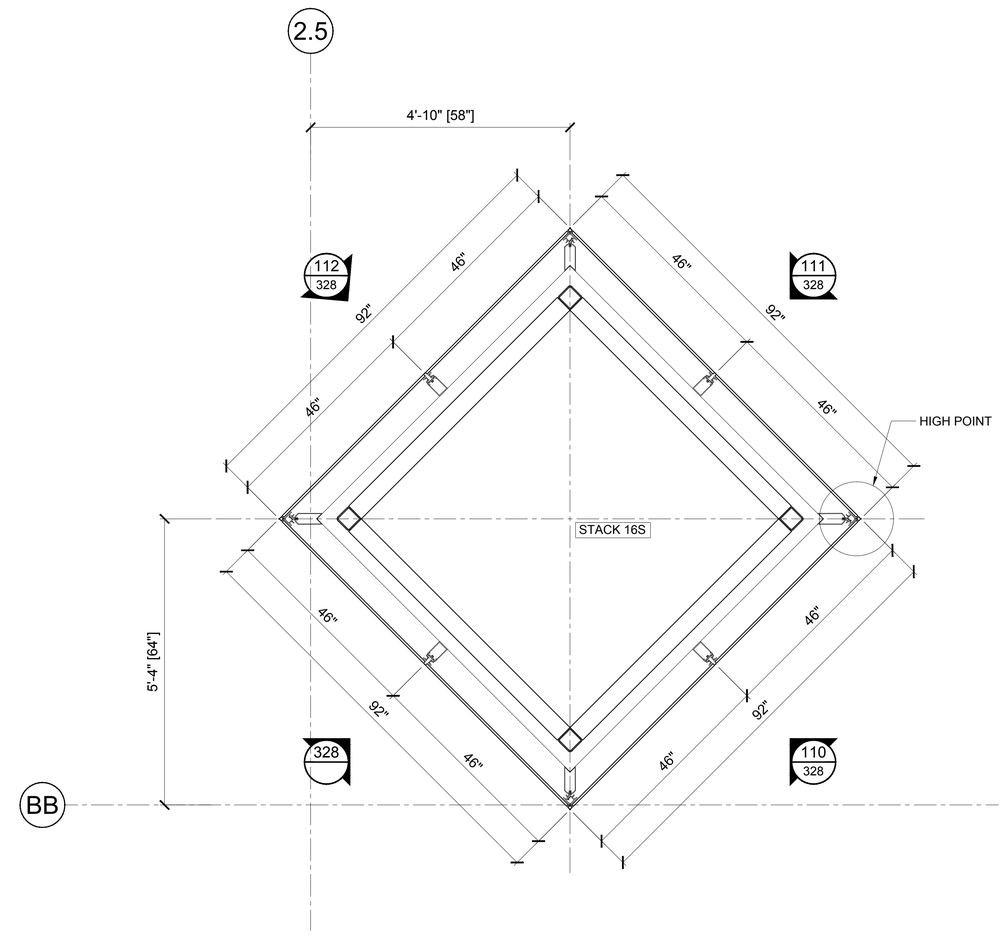


33 STACK 16S
ARCH. DETAIL REF:
ARCH. SHEET REF:
STACK SOUTH OF LAKESIDE

GMS
WWW.GARDNERMETAL.COM

LEGENDS

PROJECT
#337
CMMCC
MECH. STACKS
SHOP DRAWINGS

CUSTOMER
HARMON INC.
BOLINGBROOK IL

ARCHITECT
LMN ARCHITECTS
SEATTLE WASHINGTON

GENERAL CONTRACTOR
TURNER

SUBMITTALS

| NO | REV | DATE | DESCRIPTION |
|---|---|---|---|
| 1 | -- | 1/12/12 | 1ST SUBMITTAL |
| 2 | 1 | 3/21/12 | 2ND SUBMITTAL |
| 3 | 2 | 6/5/12 | FIELD & FILE |

CONTENTS: STACK PLANS
DWN: WP SCALE: 3/4"=1'-0"

SHEET NUMBER
219

© 2010 GARDNER METAL SYSTEMS, INC. All Rights Reserved

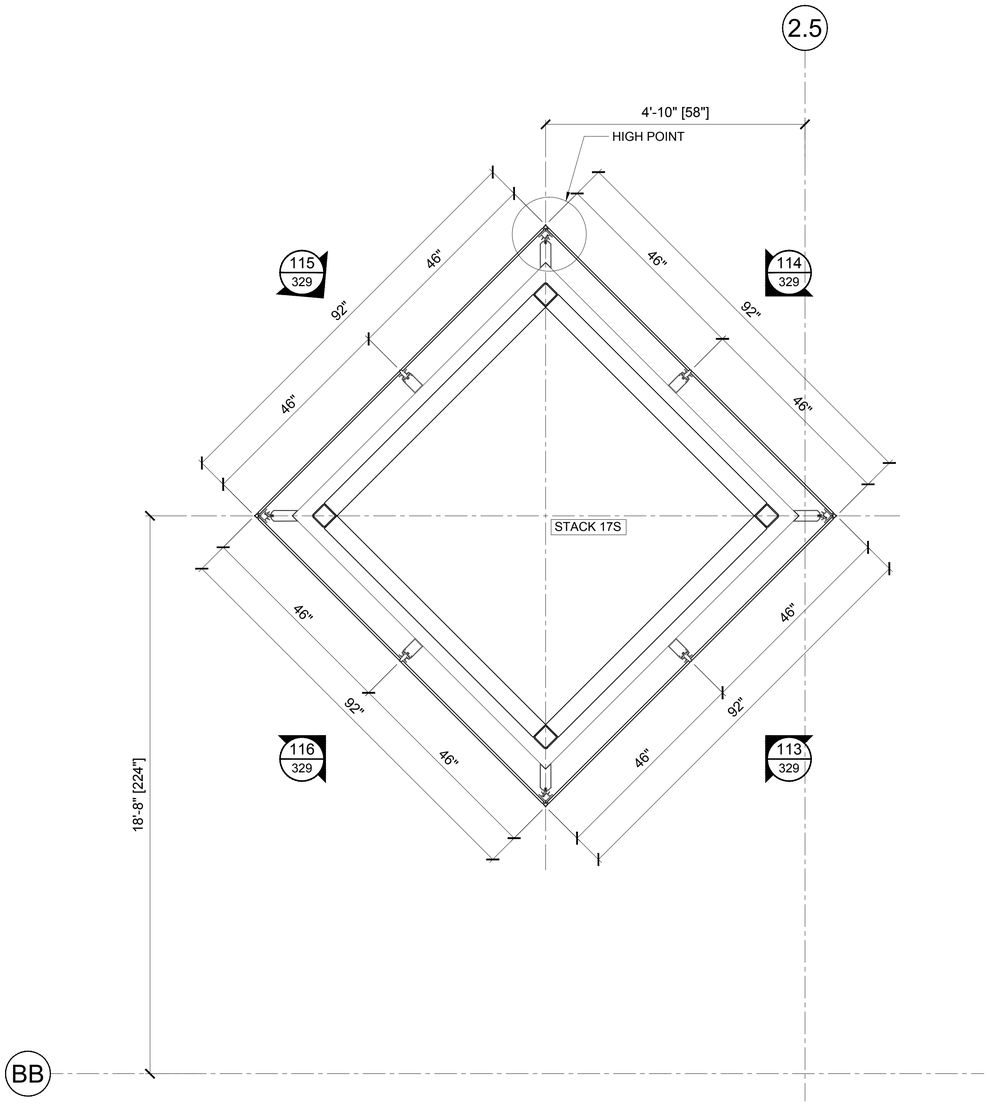


34 STACK 17S
ARCH. DETAIL REF:
ARCH. SHEET REF:
STACK SOUTH OF LAKESIDE

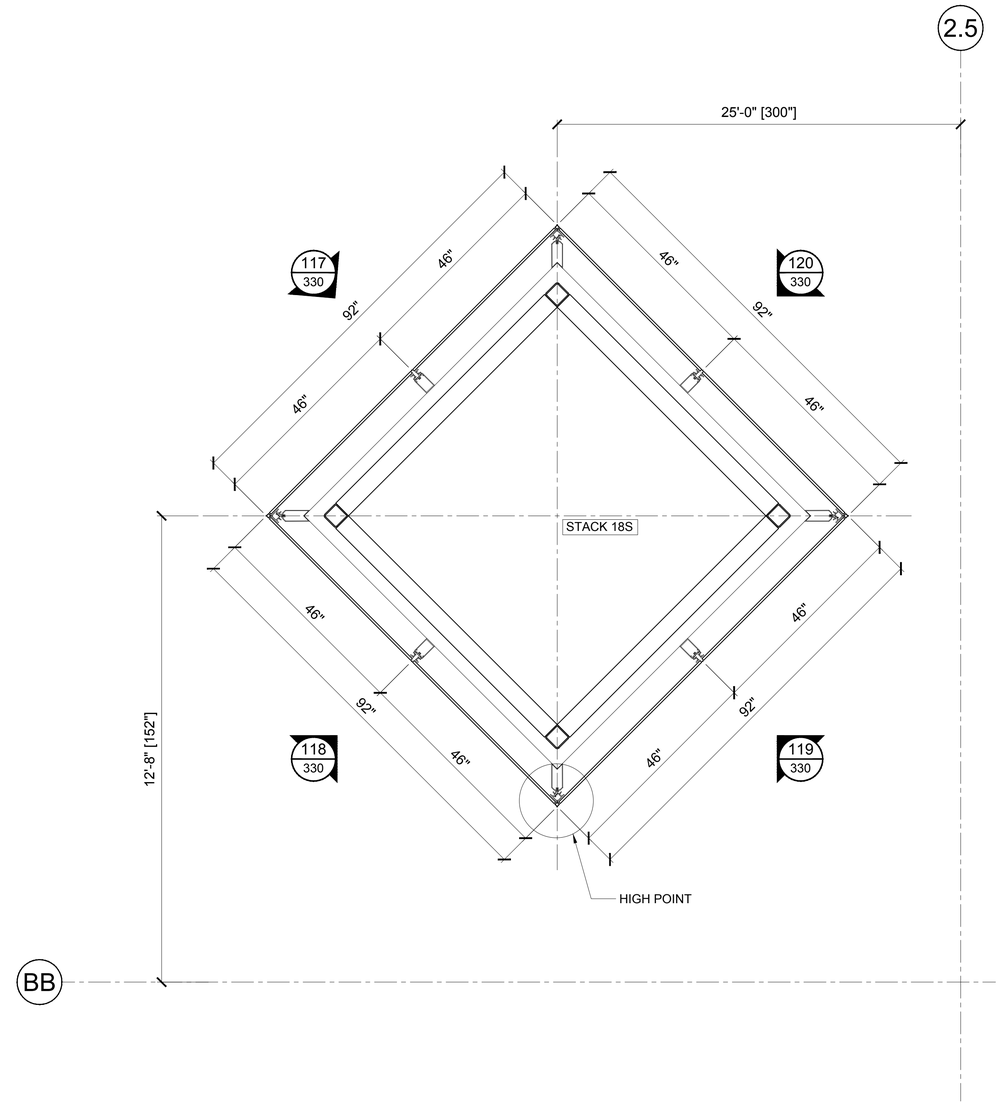


35 STACK 18S
ARCH. DETAIL REF:
ARCH. SHEET REF:
STACK SOUTH OF LAKESIDE

GMS
WWW.GARDNERMETAL.COM

LEGENDS

PROJECT

#337
CMMCC
MECH. STACKS
SHOP DRAWINGS

CUSTOMER
HARMON INC.
BOLINGBROOK IL

ARCHITECT
LMN ARCHITECTS
SEATTLE WASHINGTON

GENERAL CONTRACTOR
TURNER

SUBMITTALS

| NO | REV | DATE | DESCRIPTION |
|---|---|---|---|
| 1 | -- | 1/12/12 | 1ST SUBMITTAL |
| 2 | 1 | 3/21/12 | 2ND SUBMITTAL |
| 3 | 2 | 6/5/12 | FIELD & FILE |

CONTENTS: STACK PLANS
DWN: WP SCALE: 3/4"=1'-0"

SHEET NUMBER
220

© 2010 GARDNER METAL SYSTEMS, INC. All Rights Reserved

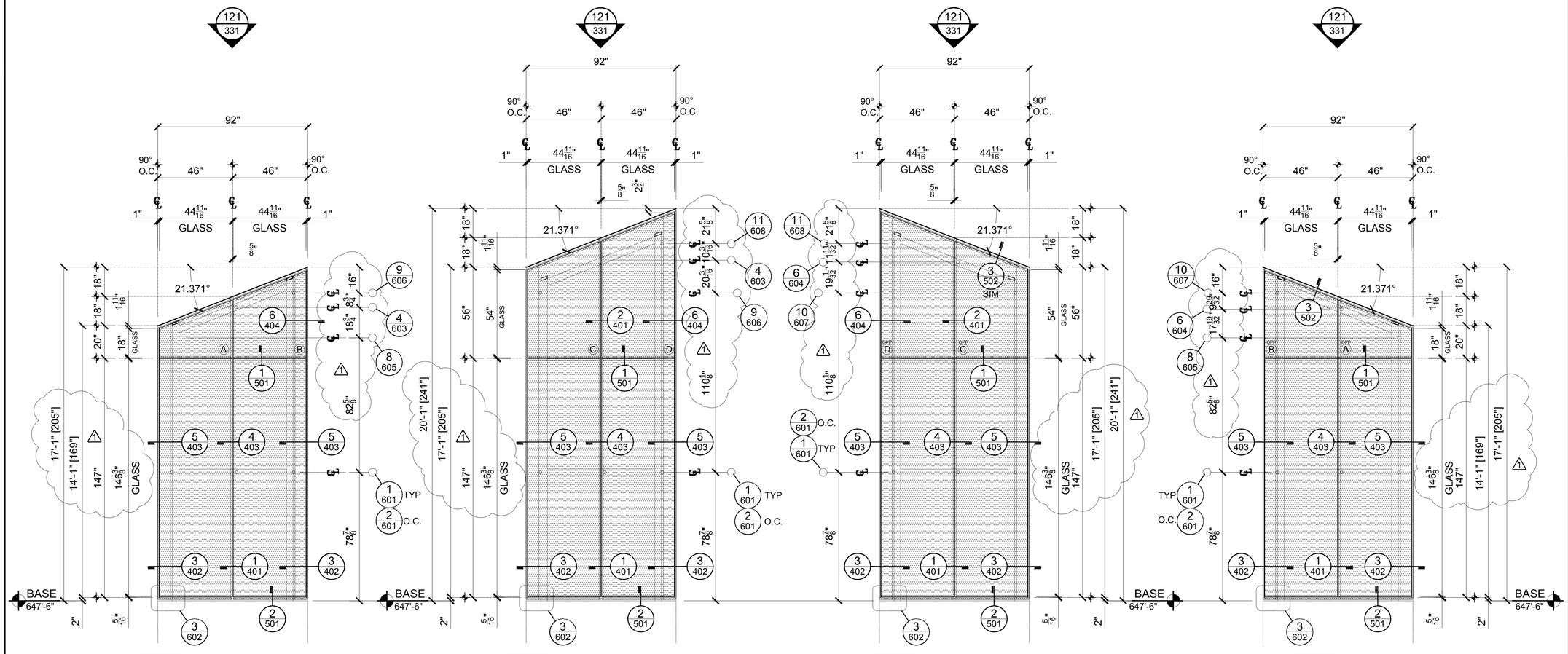


1 STACK 1N
REF NO:
REF SHT:
TOTAL QUANTITY THUS: 1

2 STACK 1N
REF NO:
REF SHT:
TOTAL QUANTITY THUS: 1

3 STACK 1N
REF NO:
REF SHT:
TOTAL QUANTITY THUS: 1

4 STACK 1N
REF NO:
REF SHT:
TOTAL QUANTITY THUS: 1

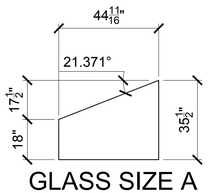


GLASS SIZE A

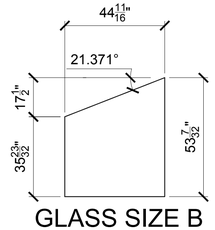


GLASS SIZE B

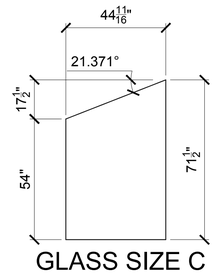


GLASS SIZE C

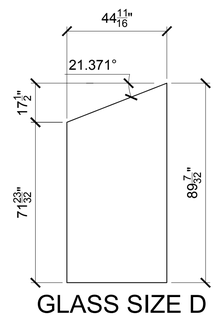


GLASS SIZE D

STACK 1N (NORTH OF LAKESIDE)

SEE PLAN 6/206

GL-27 TYP. GLASS TYPE UNLESS NOTED OTHERWISE

GMS
WWW.GARDNERMETAL.COM

LEGENDS

PROJECT

# #337 CMMCC MECH. STACKS

SHOP DRAWINGS

CUSTOMER
HARMON INC.
BOLINGBROOK IL

ARCHITECT
LMN ARCHITECTS
SEATTLE WASHINGTON

GENERAL CONTRACTOR
TURNER

SUBMITTALS

| NO | REV | DATE | DESCRIPTION |
|---|---|---|---|
| 1 | -- | 1/12/12 | 1ST SUBMITTAL |
| 2 | 1 | 3/21/12 | 2ND SUBMITTAL |
| 3 | 2 | 6/5/12 | FIELD & FILE |

CONTENTS: ELEVATIONS
DWN: WP SCALE: 3/8"=1'-0"

SHEET NUMBER
301

© 2010 GARDNER METAL SYSTEMS, INC. All Rights Reserved

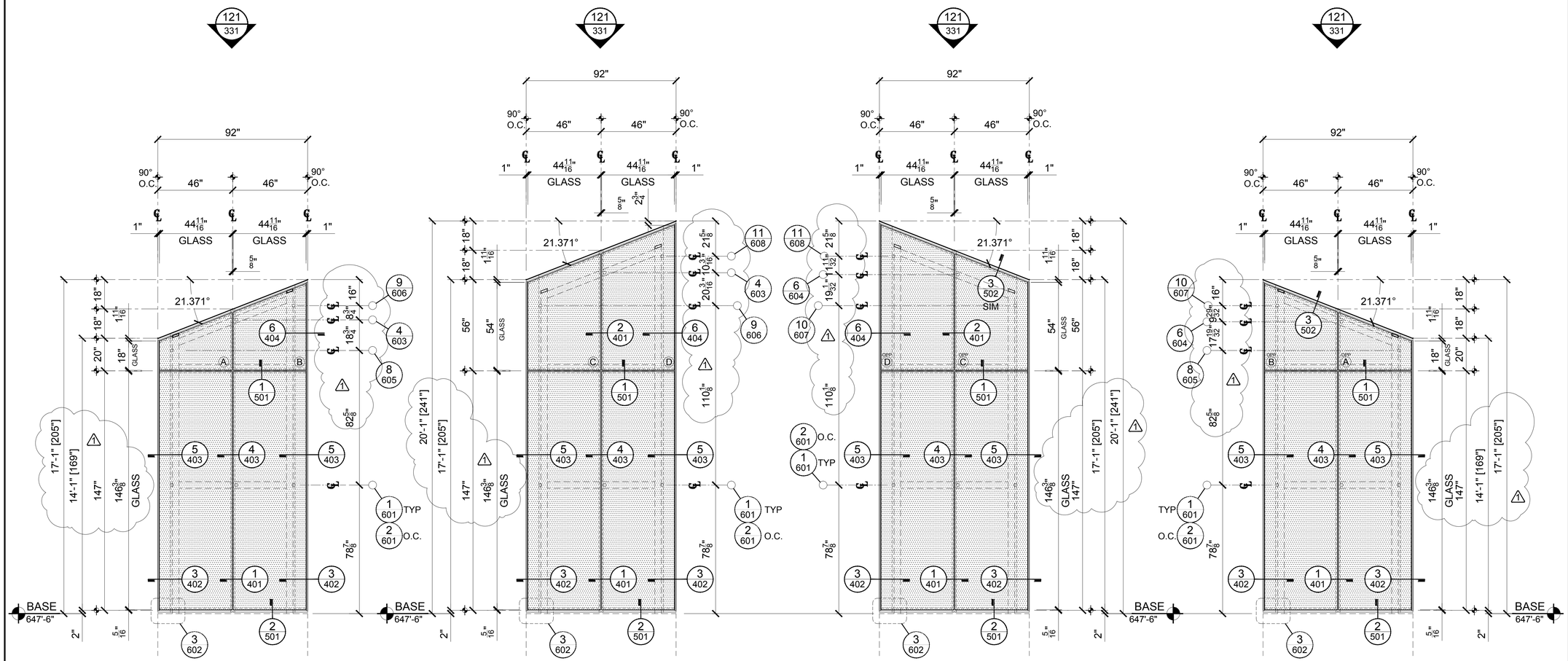


5 STACK 2N
REF NO:
REF SHT:
TOTAL QUANTITY THUS: 1

6 STACK 2N
REF NO:
REF SHT:
TOTAL QUANTITY THUS: 1

7 STACK 2N
REF NO:
REF SHT:
TOTAL QUANTITY THUS: 1

8 STACK 2N
REF NO:
REF SHT:
TOTAL QUANTITY THUS: 1

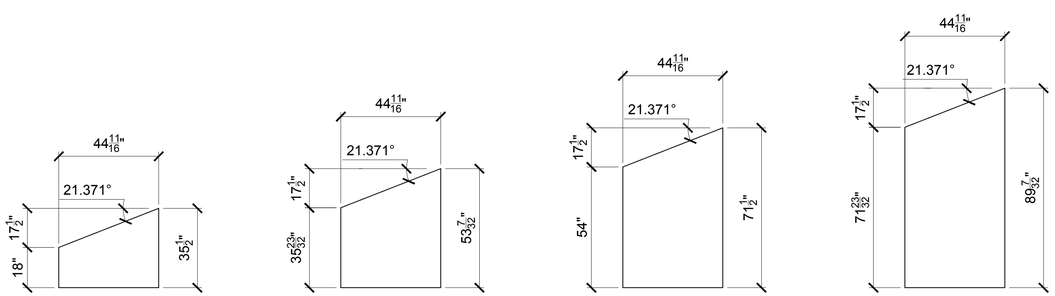


GLASS SIZE A

GLASS SIZE B

GLASS SIZE C

GLASS SIZE D

STACK 2N (NORTH OF LAKESIDE)

SEE PLAN 7/206

GL-27 TYP. GLASS TYPE UNLESS NOTED OTHERWISE

GMS
WWW.GARDNERMETAL.COM

LEGENDS

PROJECT

# #337 CMMCC MECH. STACKS

SHOP DRAWINGS

CUSTOMER
HARMON INC.
BOLINGBROOK IL

ARCHITECT
LMN ARCHITECTS
SEATTLE WASHINGTON

GENERAL CONTRACTOR
TURNER

SUBMITTALS

| NO | REV | DATE | DESCRIPTION |
|---|---|---|---|
| 1 | -- | 1/12/12 | 1ST SUBMITTAL |
| 2 | 1 | 3/21/12 | 2ND SUBMITTAL |
| 3 | 2 | 6/5/12 | FIELD & FILE |

CONTENTS: ELEVATIONS
DWN: WP SCALE: 3/8"=1'-0"

SHEET NUMBER
302

© 2010 GARDNER METAL SYSTEMS, INC. All Rights Reserved

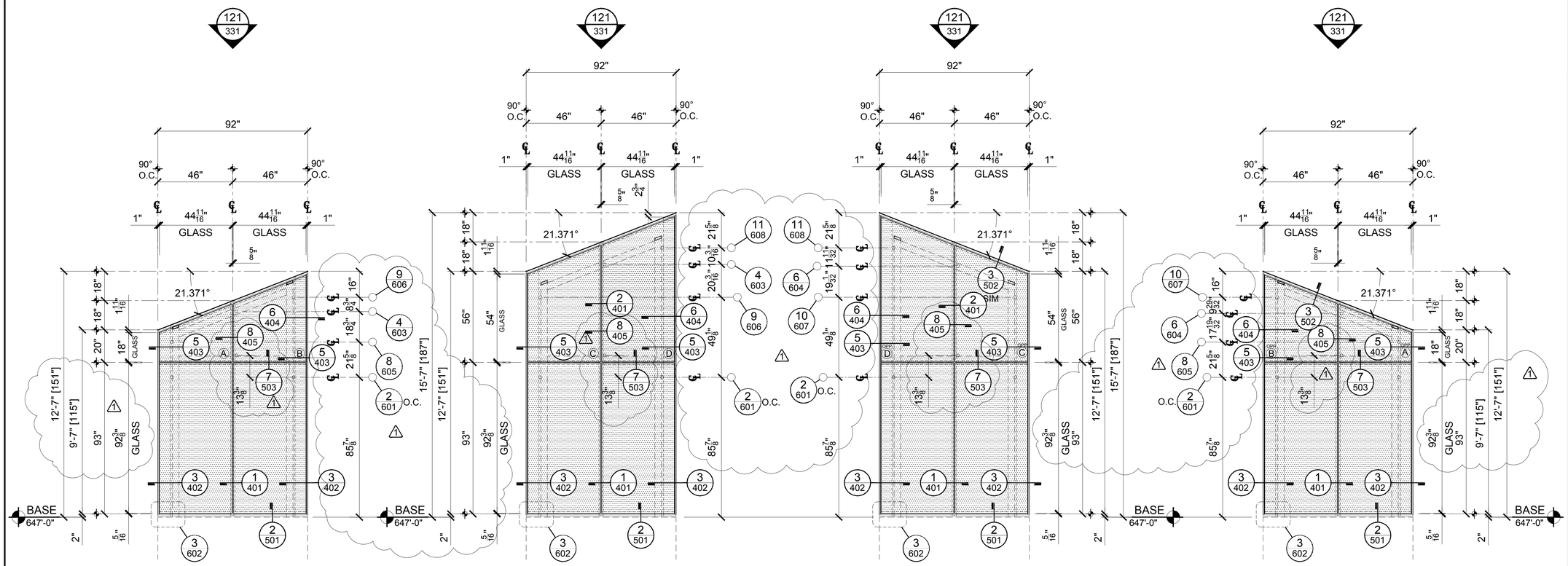


9 STACK 3N
REF NO:
REF SHT:
TOTAL QUANTITY THUS: 1

10 STACK 3N
REF NO:
REF SHT:
TOTAL QUANTITY THUS: 1

11 STACK 3N
REF NO:
REF SHT:
TOTAL QUANTITY THUS: 1

12 STACK 3N
REF NO:
REF SHT:
TOTAL QUANTITY THUS: 1

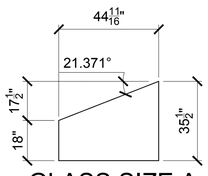


GLASS SIZE A

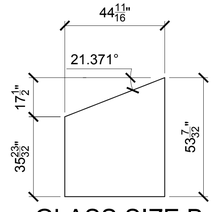


GLASS SIZE B

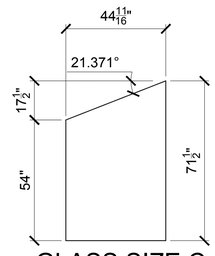


GLASS SIZE C

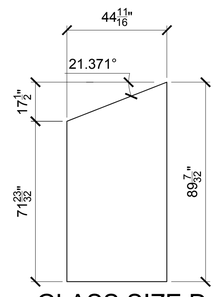


GLASS SIZE D

STACK 3N (NORTH OF LAKESIDE)

SEE PLAN 8/207

GL-27 TYP. GLASS TYPE UNLESS NOTED OTHERWISE

GMS
WWW.GARDNERMETAL.COM

LEGENDS

PROJECT

# #337 CMMCC MECH. STACKS SHOP DRAWINGS

CUSTOMER
HARMON INC.
BOLINGBROOK IL

ARCHITECT
LMN ARCHITECTS
SEATTLE WASHINGTON

GENERAL CONTRACTOR
TURNER

SUBMITTALS

| NO | REV | DATE | DESCRIPTION |
|---|---|---|---|
| 1 | -- | 1/12/12 | 1ST SUBMITTAL |
| 2 | 1 | 3/21/12 | 2ND SUBMITTAL |
| 3 | 2 | 6/5/12 | FIELD & FILE |
| | | | |

CONTENTS: ELEVATIONS
DWN: WP SCALE: 3/8"=1'-0"

SHEET NUMBER
303

© 2010 GARDNER METAL SYSTEMS, INC. All Rights Reserved

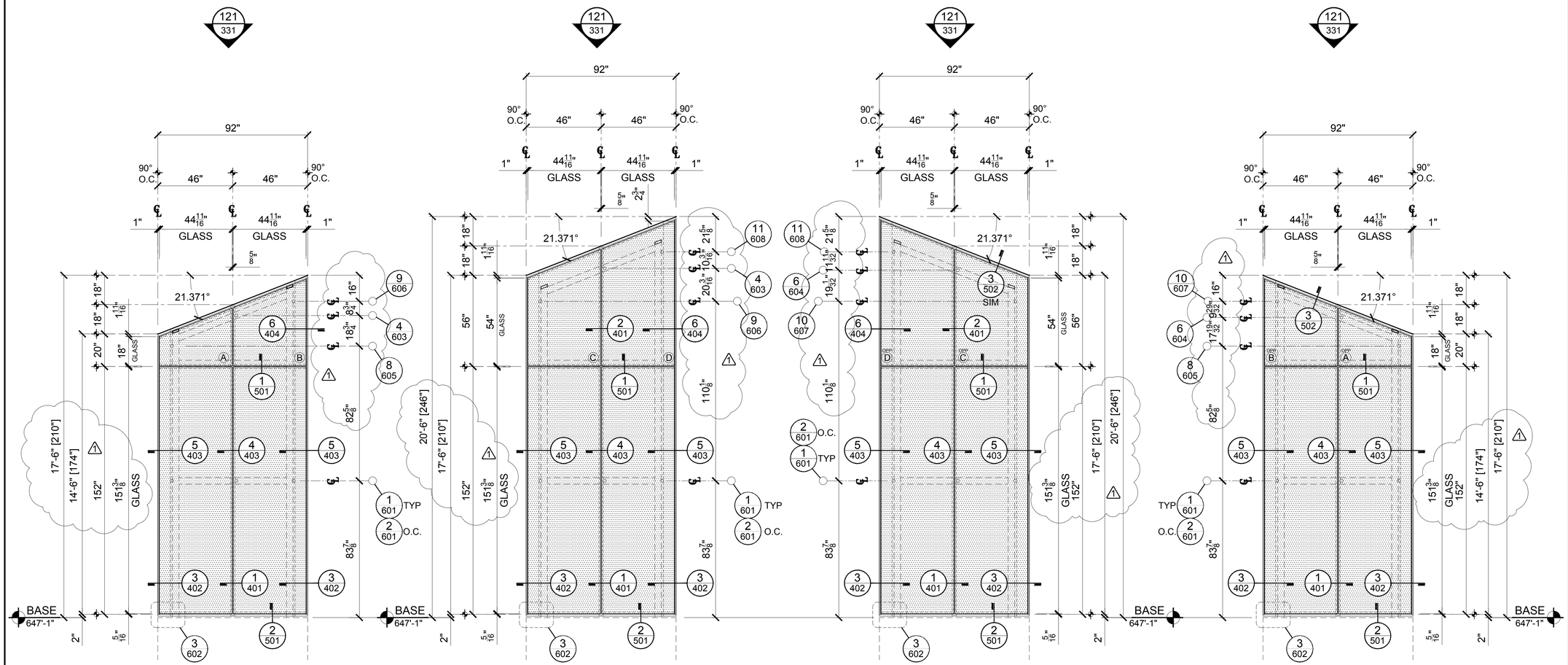


13 STACK 4N
REF NO:
REF SHT:
TOTAL QUANTITY THUS: 1

14 STACK 4N
REF NO:
REF SHT:
TOTAL QUANTITY THUS: 1

15 STACK 4N
REF NO:
REF SHT:
TOTAL QUANTITY THUS: 1

16 STACK 4N
REF NO:
REF SHT:
TOTAL QUANTITY THUS: 1

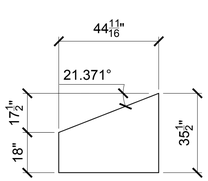


GLASS SIZE A

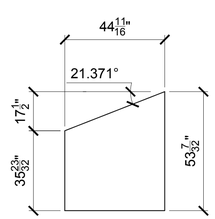


GLASS SIZE B

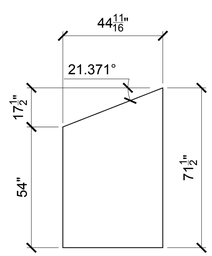


GLASS SIZE C

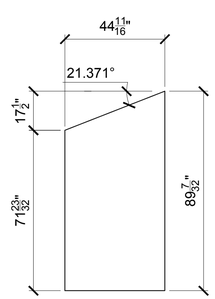


GLASS SIZE D

STACK 4N (NORTH OF LAKESIDE)

SEE PLAN 9/207

GL-27 TYP. GLASS TYPE UNLESS NOTED OTHERWISE

GMS
WWW.GARDNERMETAL.COM

LEGENDS

PROJECT

# #337 CMMCC MECH. STACKS

SHOP DRAWINGS

CUSTOMER
HARMON INC.
BOLINGBROOK IL

ARCHITECT
LMN ARCHITECTS
SEATTLE WASHINGTON

GENERAL CONTRACTOR
TURNER

SUBMITTALS

| NO | REV | DATE | DESCRIPTION |
|---|---|---|---|
| 1 | -- | 1/12/12 | 1ST SUBMITTAL |
| 2 | 1 | 3/21/12 | 2ND SUBMITTAL |
| 3 | 2 | 6/5/12 | FIELD & FILE |

CONTENTS: ELEVATIONS
DWN: WP SCALE: 3/8"=1'-0"

SHEET NUMBER
304

© 2010 GARDNER METAL SYSTEMS, INC. All Rights Reserved

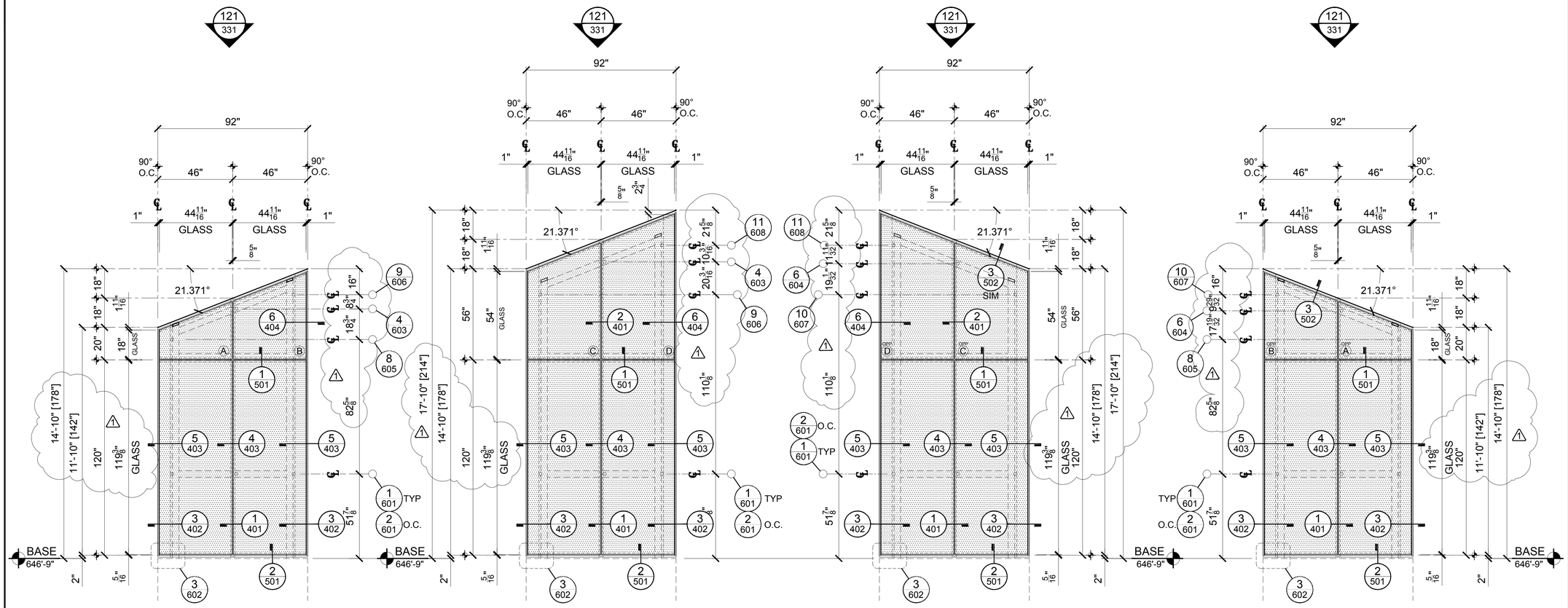


17 STACK 5N
REF NO:
REF SHT:
TOTAL QUANTITY THUS: 1

18 STACK 5N
REF NO:
REF SHT:
TOTAL QUANTITY THUS: 1

19 STACK 5N
REF NO:
REF SHT:
TOTAL QUANTITY THUS: 1

20 STACK 5N
REF NO:
REF SHT:
TOTAL QUANTITY THUS: 1

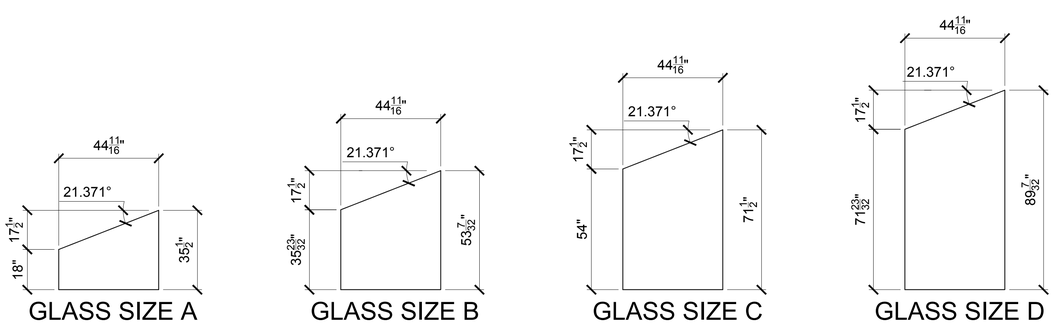


STACK 5N (NORTH OF LAKESIDE)

SEE PLAN 10/208

GL-27 TYP. GLASS TYPE UNLESS NOTED OTHERWISE

GMS
WWW.GARDNERMETAL.COM

LEGENDS

PROJECT

# #337 CMMCC MECH. STACKS

SHOP DRAWINGS

CUSTOMER
HARMON INC.
BOLINGBROOK IL

ARCHITECT
LMN ARCHITECTS
SEATTLE WASHINGTON

GENERAL CONTRACTOR
TURNER

SUBMITTALS

| NO | REV | DATE | DESCRIPTION |
|---|---|---|---|
| 1 | -- | 1/12/12 | 1ST SUBMITTAL |
| 2 | 1 | 3/21/12 | 2ND SUBMITTAL |
| 3 | 2 | 6/5/12 | FIELD & FILE |

CONTENTS: ELEVATIONS
DWN: WP SCALE: 3/8"=1'-0"

SHEET NUMBER
305

© 2010 GARDNER METAL SYSTEMS, INC. All Rights Reserved

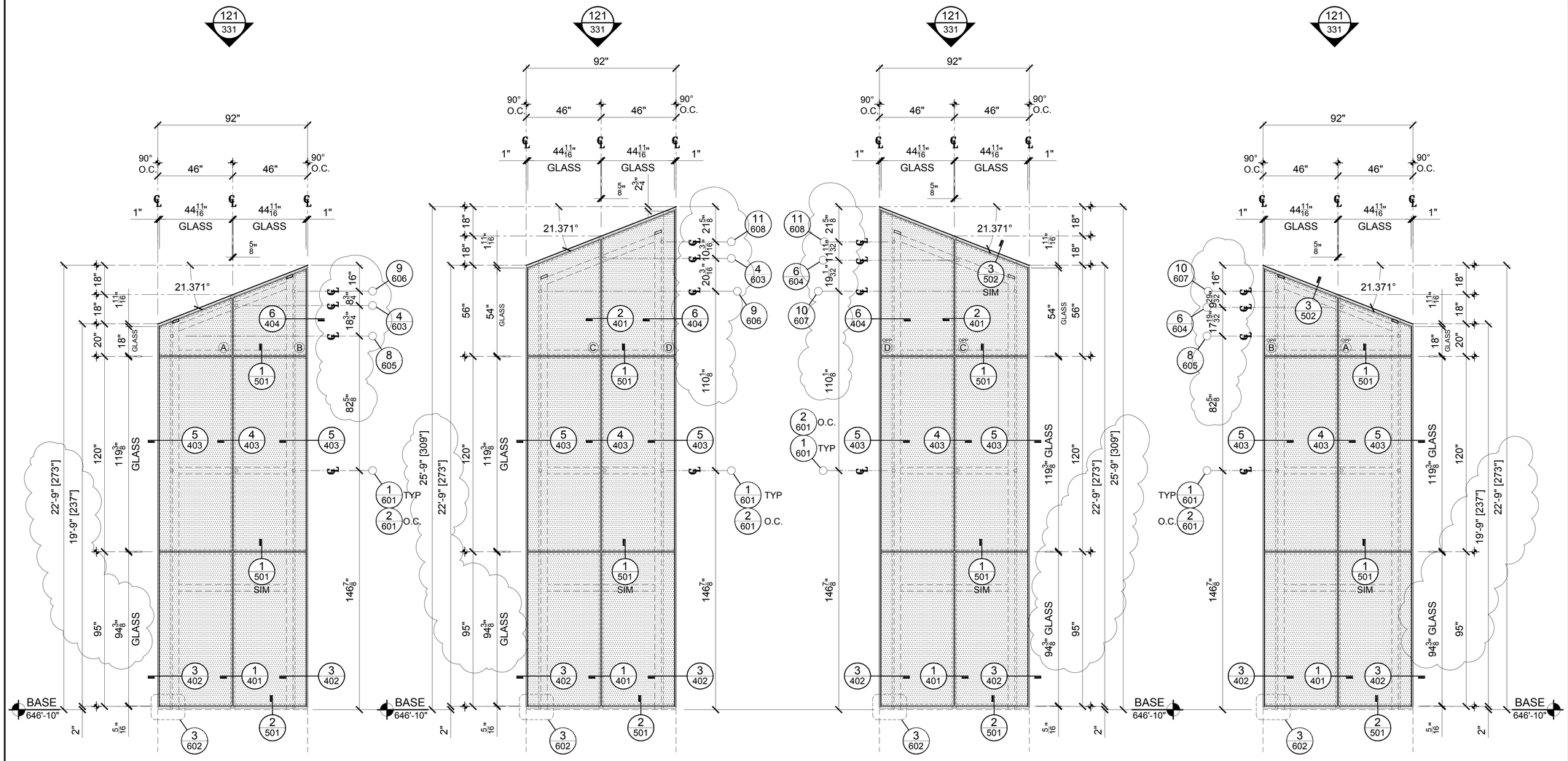


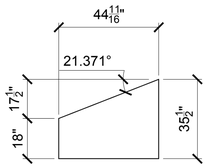


GLASS SIZE A

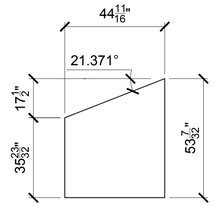


GLASS SIZE B

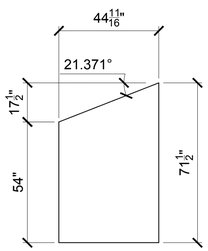


GLASS SIZE C

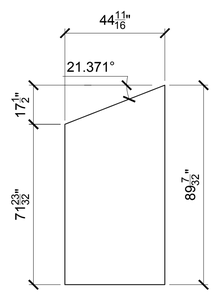


GLASS SIZE D

STACK 6N (NORTH OF LAKESIDE)

SEE PLAN 11/208

GL-27 TYP. GLASS TYPE UNLESS NOTED OTHERWISE

GMS
WWW.GARDNERMETAL.COM

LEGENDS

PROJECT

# #337 CMMCC MECH. STACKS SHOP DRAWINGS

CUSTOMER
HARMON INC.
BOLINGBROOK IL

ARCHITECT
LMN ARCHITECTS
SEATTLE WASHINGTON

GENERAL CONTRACTOR
TURNER

SUBMITTALS

| NO | REV | DATE | DESCRIPTION |
|---|---|---|---|
| 1 | -- | 1/12/12 | 1ST SUBMITTAL |
| 2 | 1 | 3/21/12 | 2ND SUBMITTAL |
| 3 | 2 | 6/5/12 | FIELD & FILE |

CONTENTS: ELEVATIONS
DWN: WP SCALE: 3/8"=1'-0"

SHEET NUMBER
306

© 2010 GARDNER METAL SYSTEMS, INC. All Rights Reserved

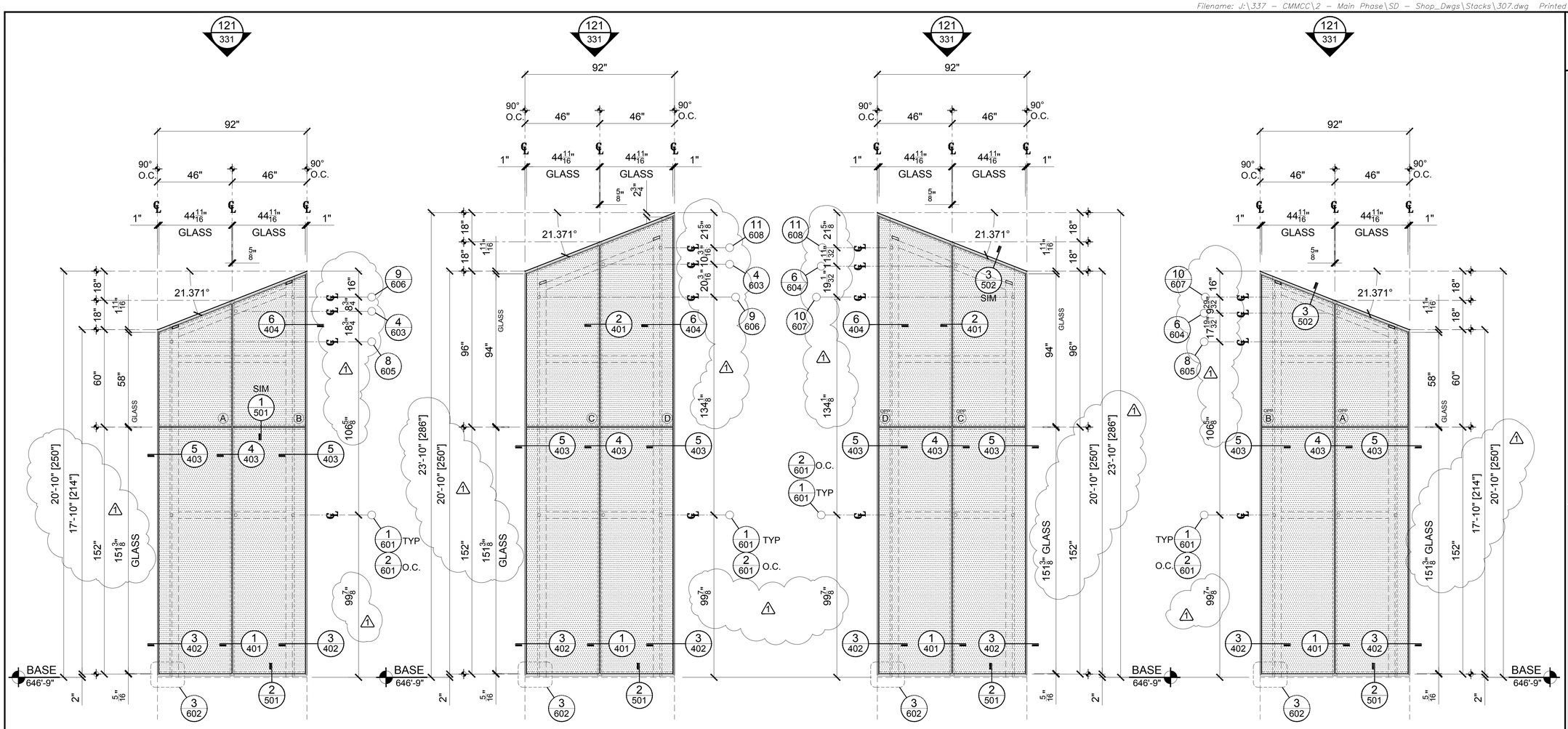


25 STACK 7N
REF NO.
REF SHT.
TOTAL QUANTITY THUS: 1

26 STACK 7N
REF NO.
REF SHT.
TOTAL QUANTITY THUS: 1

27 STACK 7N
REF NO.
REF SHT.
TOTAL QUANTITY THUS: 1

28 STACK 7N
REF NO.
REF SHT.
TOTAL QUANTITY THUS: 1

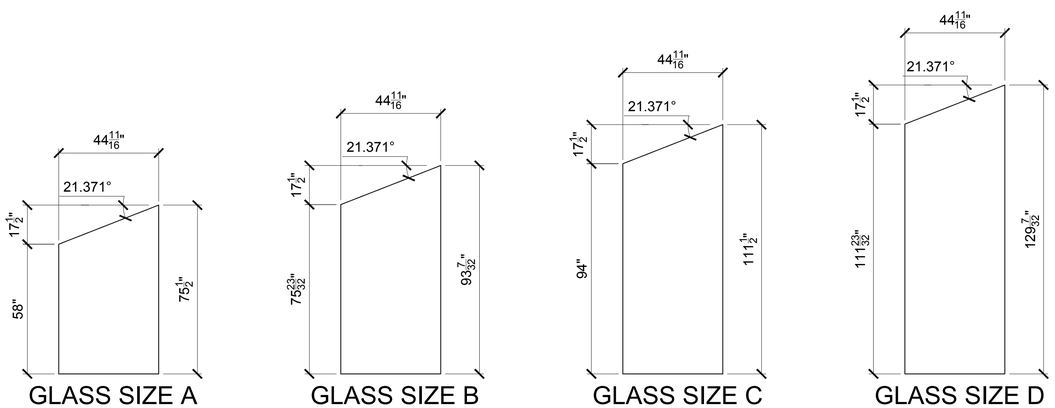


GLASS SIZE A

GLASS SIZE B

GLASS SIZE C

GLASS SIZE D

STACK 7N (NORTH OF LAKESIDE)

SEE PLAN 12/209

GL-27 TYP. GLASS TYPE UNLESS NOTED OTHERWISE

GMS
WWW.GARDNERMETAL.COM

LEGENDS

PROJECT

# #337 CMMCC MECH. STACKS

SHOP DRAWINGS

CUSTOMER
HARMON INC.
BOLINGBROOK IL

ARCHITECT
LMN ARCHITECTS
SEATTLE WASHINGTON

GENERAL CONTRACTOR
TURNER

SUBMITTALS

| NO | REV | DATE | DESCRIPTION |
|---|---|---|---|
| 1 | -- | 1/12/12 | 1ST SUBMITTAL |
| 2 | 1 | 3/21/12 | 2ND SUBMITTAL |
| 3 | 2 | 6/5/12 | FIELD & FILE |

CONTENTS: ELEVATIONS
DWN: WP SCALE: 3/8"=1'-0"

SHEET NUMBER
307

© 2010 GARDNER METAL SYSTEMS, INC. All Rights Reserved

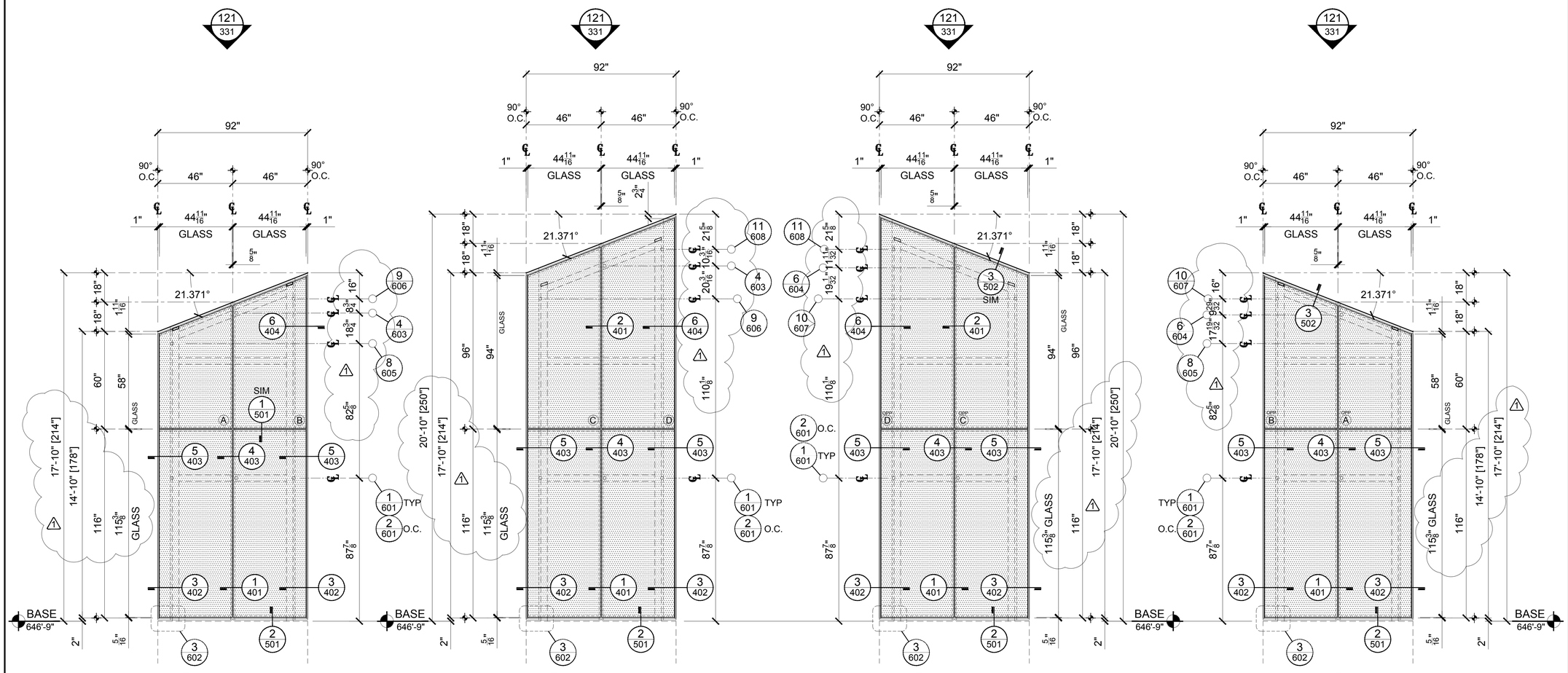


29 STACK 8N
REF NO.:
REF SHT.:
TOTAL QUANTITY THUS: 1

30 STACK 8N
REF NO.:
REF SHT.:
TOTAL QUANTITY THUS: 1

31 STACK 8N
REF NO.:
REF SHT.:
TOTAL QUANTITY THUS: 1

32 STACK 8N
REF NO.:
REF SHT.:
TOTAL QUANTITY THUS: 1

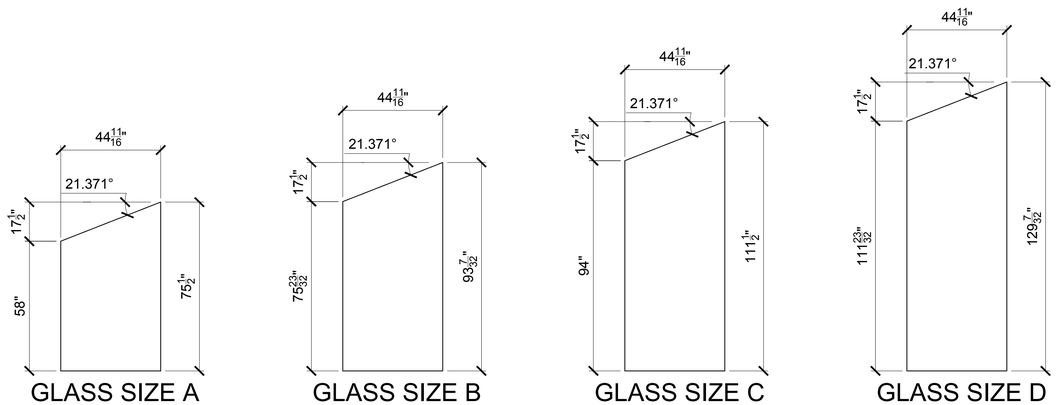


GLASS SIZE A

GLASS SIZE B

GLASS SIZE C

GLASS SIZE D

STACK 8N (NORTH OF LAKESIDE)

SEE PLAN 13/209

GL-27 TYP. GLASS TYPE UNLESS NOTED OTHERWISE

GMS
WWW.GARDNERMETAL.COM

LEGENDS

PROJECT

# #337 CMMCC MECH. STACKS SHOP DRAWINGS

CUSTOMER
HARMON INC.
BOLINGBROOK IL

ARCHITECT
LMN ARCHITECTS
SEATTLE WASHINGTON

GENERAL CONTRACTOR
TURNER

SUBMITTALS

| NO | REV | DATE | DESCRIPTION |
|---|---|---|---|
| 1 | -- | 1/12/12 | 1ST SUBMITTAL |
| 2 | 1 | 3/21/12 | 2ND SUBMITTAL |
| 3 | 2 | 6/5/12 | FIELD & FILE |

CONTENTS: ELEVATIONS
DWN: WP SCALE: 3/8"=1'-0"

SHEET NUMBER
308

© 2010 GARDNER METAL SYSTEMS, INC. All Rights Reserved

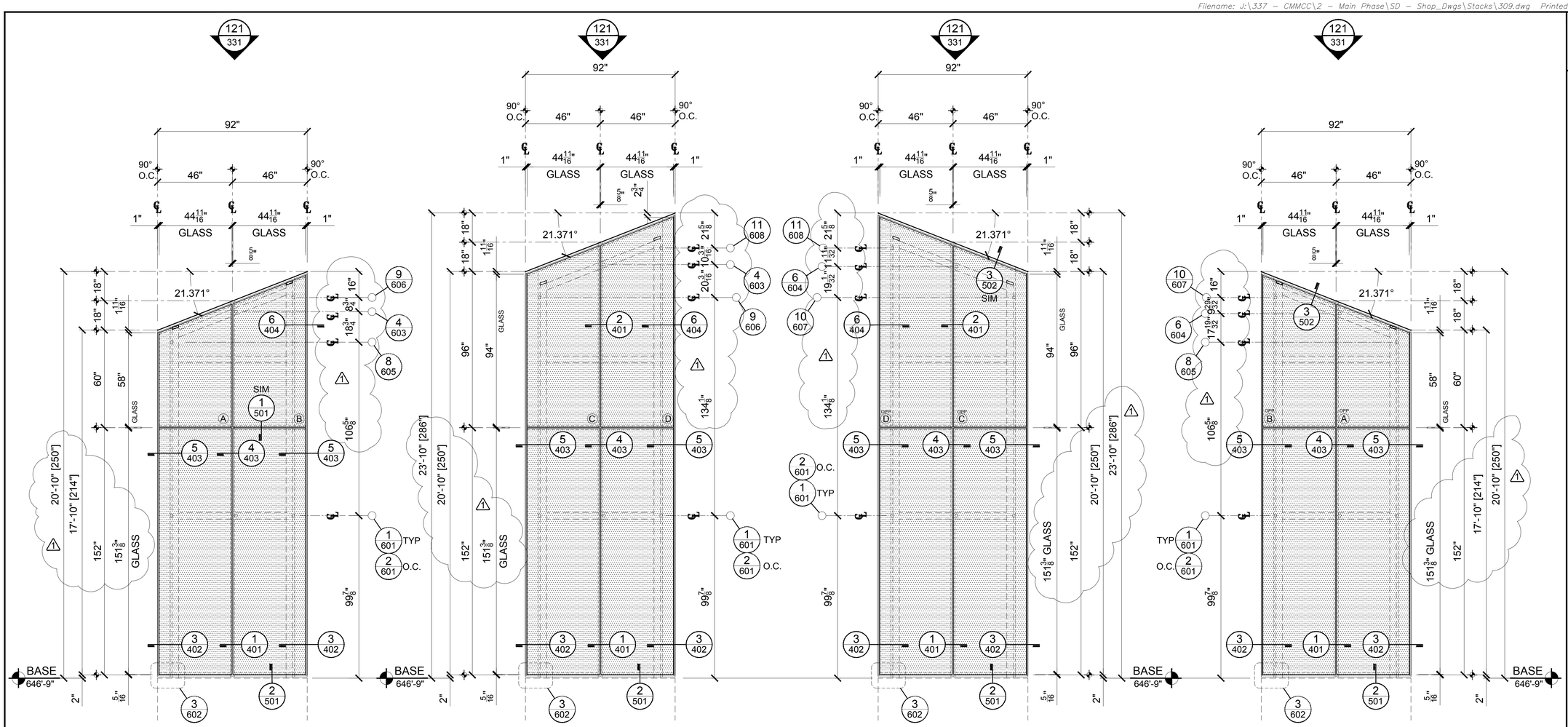


| 33 | STACK 9N |
|---|---|
| REF NO: | |
| REF SHT: | TOTAL QUANTITY THUS: 1 |

| 34 | STACK 9N |
|---|---|
| REF NO: | |
| REF SHT: | TOTAL QUANTITY THUS: 1 |

| 35 | STACK 9N |
|---|---|
| REF NO: | |
| REF SHT: | TOTAL QUANTITY THUS: 1 |

| 36 | STACK 9N |
|---|---|
| REF NO: | |
| REF SHT: | TOTAL QUANTITY THUS: 1 |

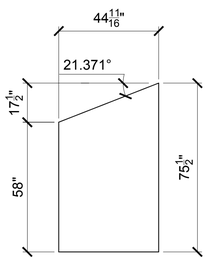


GLASS SIZE A

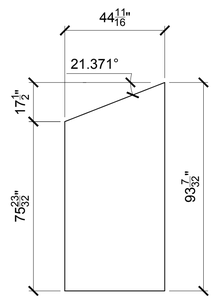


GLASS SIZE B

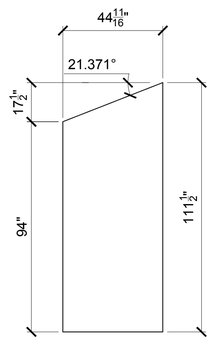


GLASS SIZE C

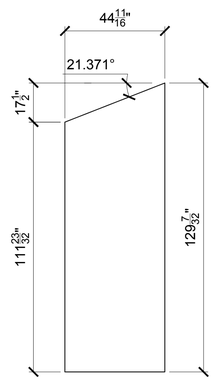


GLASS SIZE D

STACK 9N (NORTH OF LAKESIDE)

SEE PLAN 14/210

GL-27 TYP. GLASS TYPE UNLESS NOTED OTHERWISE

GMS
WWW.GARDNERMETAL.COM

LEGENDS

PROJECT

# #337 CMMCC MECH. STACKS SHOP DRAWINGS

CUSTOMER
HARMON INC.
BOLINGBROOK IL

ARCHITECT
LMN ARCHITECTS
SEATTLE WASHINGTON

GENERAL CONTRACTOR
TURNER

SUBMITTALS

| NO | REV | DATE | DESCRIPTION |
|---|---|---|---|
| 1 | -- | 1/12/12 | 1ST SUBMITTAL |
| 2 | 1 | 3/21/12 | 2ND SUBMITTAL |
| 3 | 2 | 6/5/12 | FIELD & FILE |

CONTENTS: ELEVATIONS
DWN: WP SCALE: 3/8"=1'-0"

SHEET NUMBER
309

© 2010 GARDNER METAL SYSTEMS, INC. All Rights Reserved

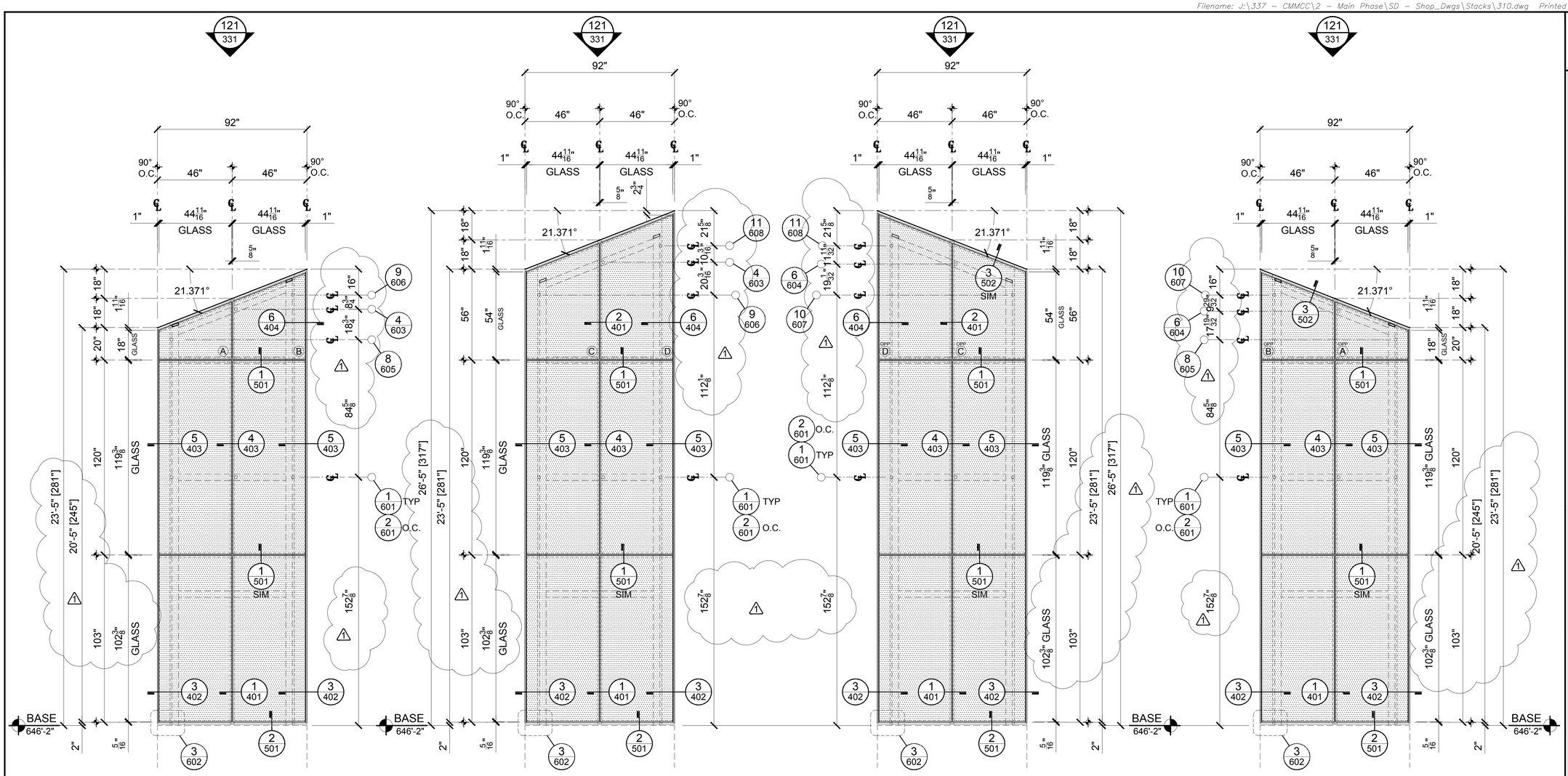


37 STACK 10N
REF NO.
REF SHT:
TOTAL QUANTITY THUS: 1

38 STACK 10N
REF NO.
REF SHT:
TOTAL QUANTITY THUS: 1

39 STACK 10N
REF NO.
REF SHT:
TOTAL QUANTITY THUS: 1

40 STACK 10N
REF NO.
REF SHT:
TOTAL QUANTITY THUS: 1

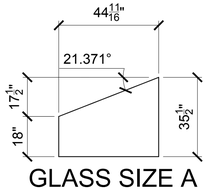


GLASS SIZE A

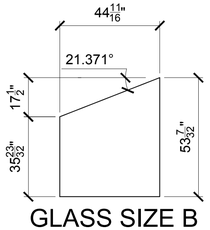


GLASS SIZE B

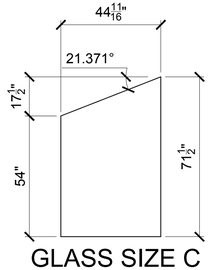


GLASS SIZE C

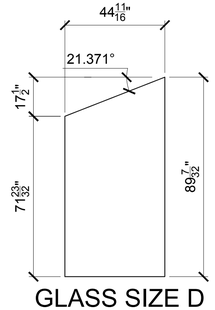


GLASS SIZE D

STACK 10N (NORTH OF LAKESIDE)

SEE PLAN 15/210

GL-27 TYP. GLASS TYPE UNLESS NOTED OTHERWISE

GMS
WWW.GARDNERMETAL.COM

LEGENDS

PROJECT

# #337 CMMCC MECH. STACKS SHOP DRAWINGS

CUSTOMER
HARMON INC.
BOLINGBROOK IL

ARCHITECT
LMN ARCHITECTS
SEATTLE WASHINGTON

GENERAL CONTRACTOR
TURNER

SUBMITTALS

| NO. | REV | DATE | DESCRIPTION |
|---|---|---|---|
| 1 | -- | 1/12/12 | 1ST SUBMITTAL |
| 2 | 1 | 3/21/12 | 2ND SUBMITTAL |
| 3 | 2 | 6/5/12 | FIELD & FILE |

CONTENTS: ELEVATIONS
DWN: WP SCALE: 3/8"=1'-0"

SHEET NUMBER
310

© 2010 GARDNER METAL SYSTEMS, INC. All Rights Reserved

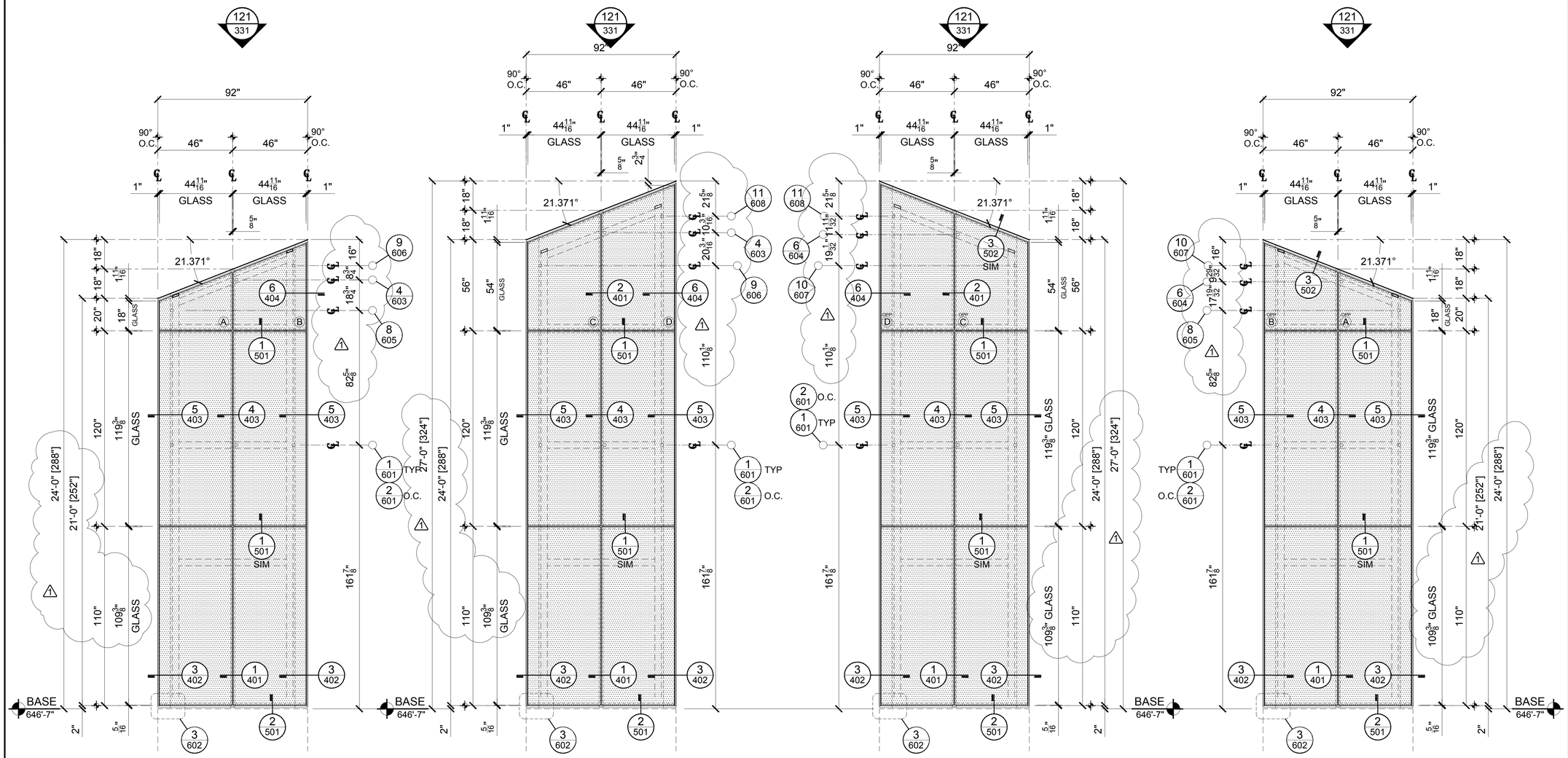


41 STACK 11N
REF NO:
REF SHT:
TOTAL QUANTITY THUS: 1

42 STACK 11N
REF NO:
REF SHT:
TOTAL QUANTITY THUS: 1

43 STACK 11N
REF NO:
REF SHT:
TOTAL QUANTITY THUS: 1

44 STACK 11N
REF NO:
REF SHT:
TOTAL QUANTITY THUS: 1

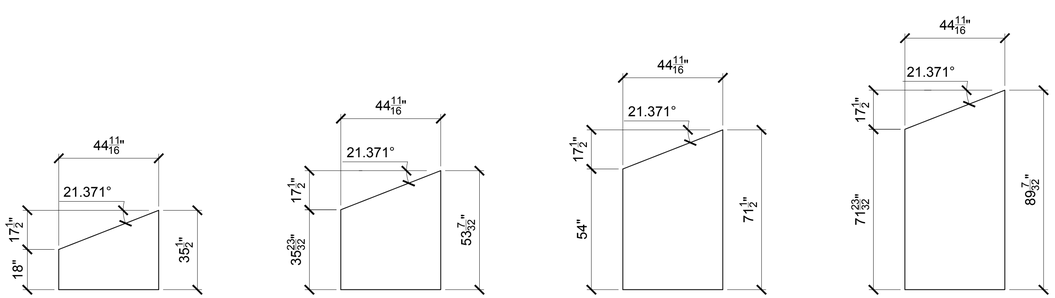


GLASS SIZE A

GLASS SIZE B

GLASS SIZE C

GLASS SIZE D

STACK 11N (NORTH OF LAKESIDE)

SEE PLAN 16/211

GL-27 TYP. GLASS TYPE UNLESS NOTED OTHERWISE

GMS
WWW.GARDNERMETAL.COM

LEGENDS

PROJECT

# #337 CMMCC MECH. STACKS SHOP DRAWINGS

CUSTOMER
HARMON INC.
BOLINGBROOK IL

ARCHITECT
LMN ARCHITECTS
SEATTLE WASHINGTON

GENERAL CONTRACTOR
TURNER

SUBMITTALS

| NO | REV | DATE | DESCRIPTION |
|---|---|---|---|
| 1 | -- | 1/12/12 | 1ST SUBMITTAL |
| 2 | 1 | 3/21/12 | 2ND SUBMITTAL |
| 3 | 2 | 6/5/12 | FIELD & FILE |

CONTENTS: ELEVATIONS
DWN: WP SCALE: 3/8"=1'-0"

SHEET NUMBER
311

© 2010 GARDNER METAL SYSTEMS, INC. All Rights Reserved

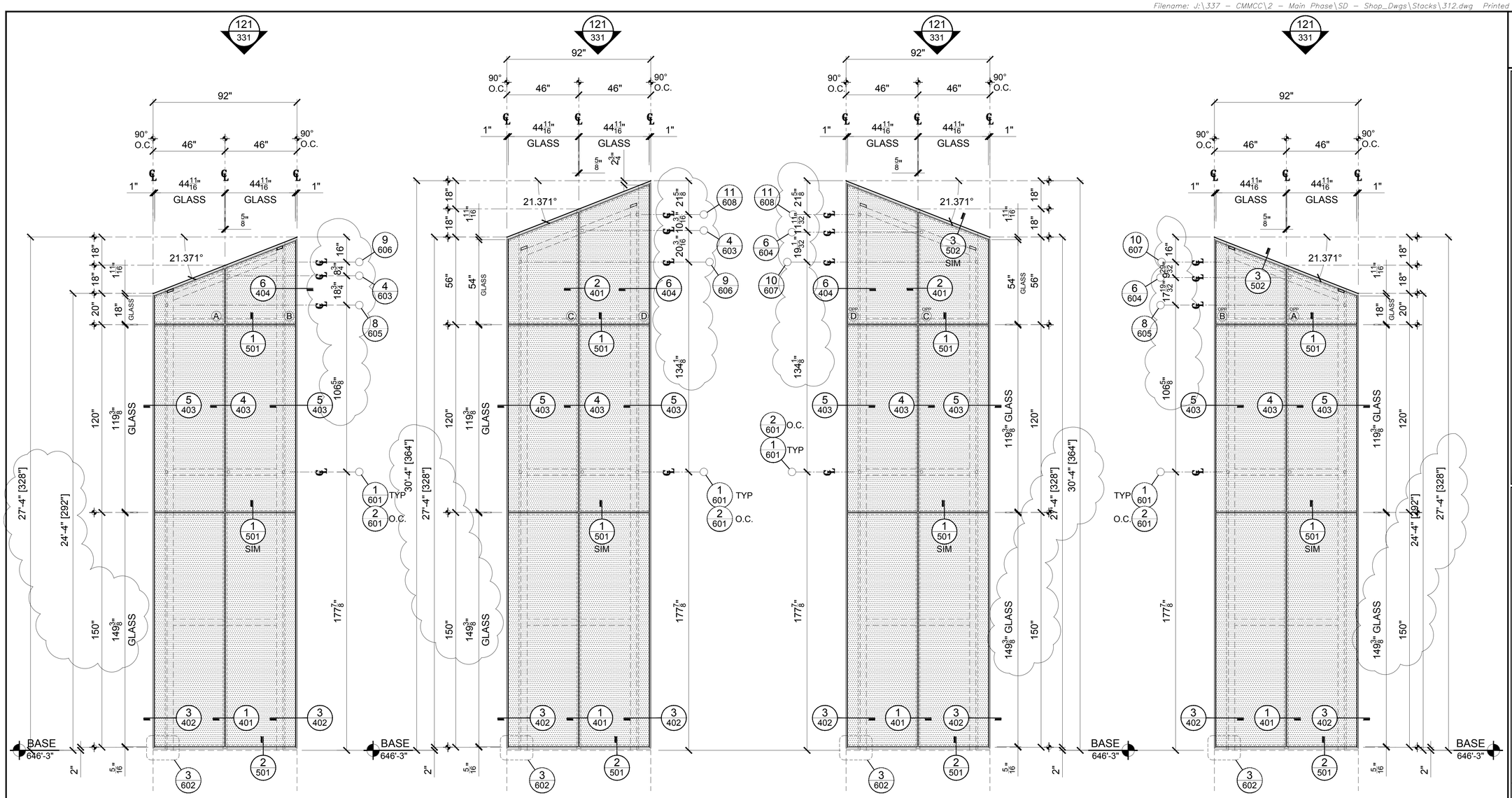


| 45 | STACK 12N |
|---|---|
| REF NO: | TOTAL QUANTITY THUS: 1 |
| REF SHT: | |

| 46 | STACK 12N |
|---|---|
| REF NO: | TOTAL QUANTITY THUS: 1 |
| REF SHT: | |

| 47 | STACK 12N |
|---|---|
| REF NO: | TOTAL QUANTITY THUS: 1 |
| REF SHT: | |

| 48 | STACK 12N |
|---|---|
| REF NO: | TOTAL QUANTITY THUS: 1 |
| REF SHT: | |

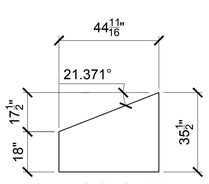


GLASS SIZE A

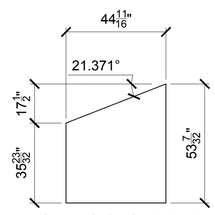


GLASS SIZE B

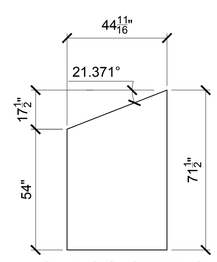


GLASS SIZE C

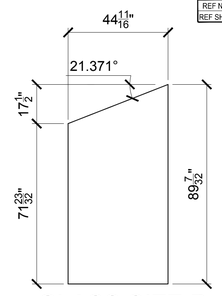


GLASS SIZE D

STACK 12N (NORTH OF LAKESIDE)

SEE PLAN 17/211

GL-27 TYP. GLASS TYPE UNLESS NOTED OTHERWISE

GMS
WWW.GARDNERMETAL.COM

LEGENDS

PROJECT

# #337 CMMCC MECH. STACKS

SHOP DRAWINGS

CUSTOMER

HARMON INC.
BOLINGBROOK IL

ARCHITECT

LMN ARCHITECTS
SEATTLE WASHINGTON

GENERAL CONTRACTOR

TURNER

SUBMITTALS

| NO | REV | DATE | DESCRIPTION |
|---|---|---|---|
| 1 | -- | 1/12/12 | 1ST SUBMITTAL |
| 2 | 1 | 3/21/12 | 2ND SUBMITTAL |
| 3 | 2 | 6/5/12 | FIELD & FILE |

CONTENTS: ELEVATIONS
DWN: WP SCALE: 3/8"=1'-0"

SHEET NUMBER

312

© 2010 GARDNER METAL SYSTEMS, INC. All Rights Reserved

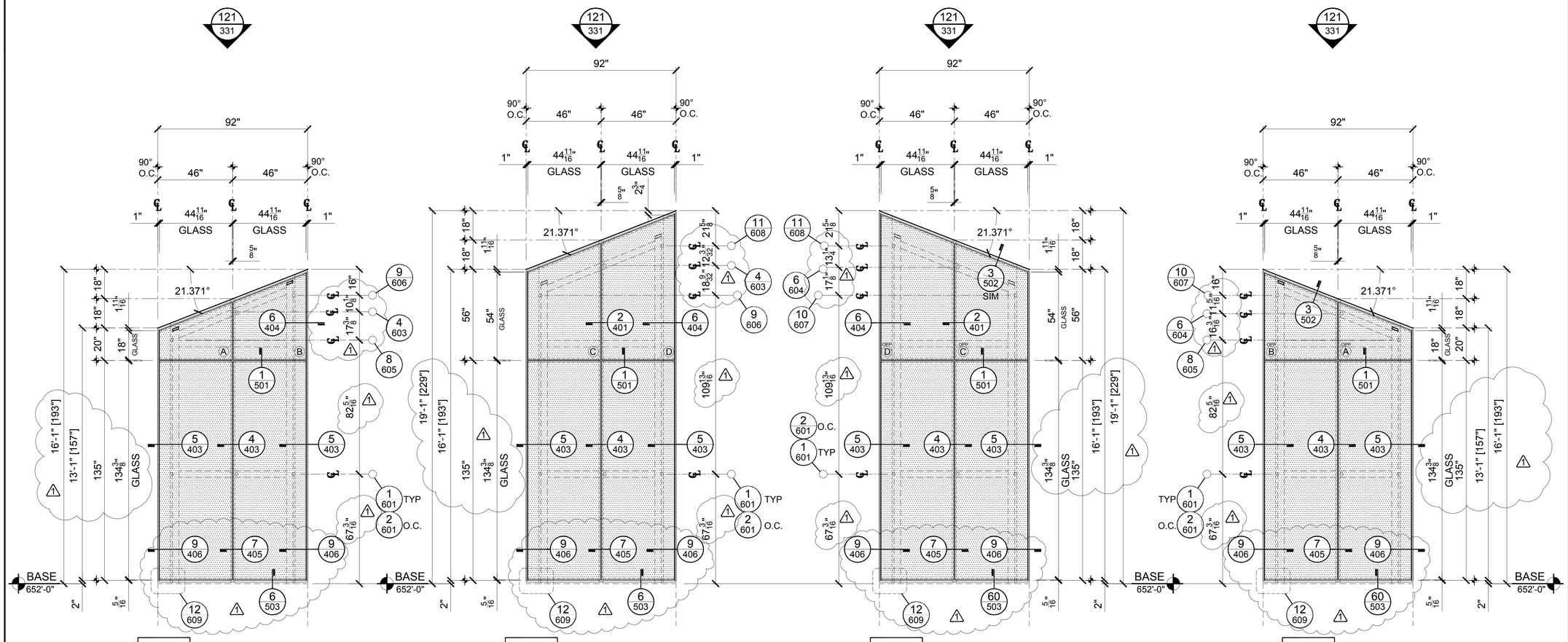


49 STACK 1S
REF NO:
REF SHT:
TOTAL QUANTITY THUS: 1

50 STACK 1S
REF NO:
REF SHT:
TOTAL QUANTITY THUS: 1

51 STACK 1S
REF NO:
REF SHT:
TOTAL QUANTITY THUS: 1

52 STACK 1S
REF NO:
REF SHT:
TOTAL QUANTITY THUS: 1

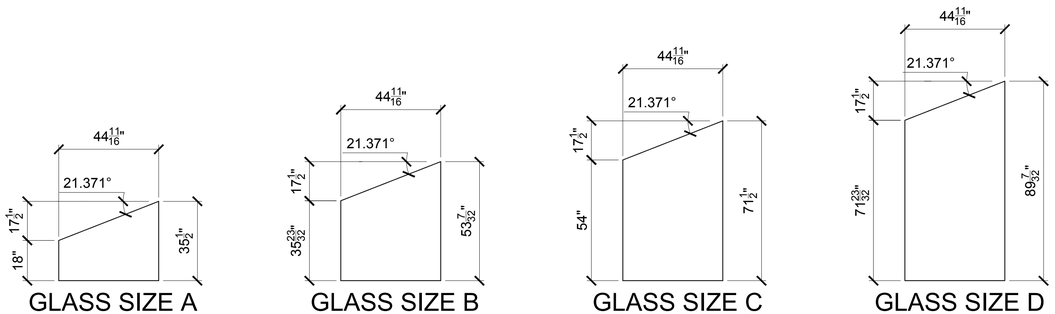


STACK 1S (SOUTH OF LAKESIDE)

SEE PLAN 18/212

GL-27 TYP. GLASS TYPE UNLESS NOTED OTHERWISE

GMS
WWW.GARDNERMETAL.COM

LEGENDS

PROJECT

# #337 CMMCC MECH. STACKS

SHOP DRAWINGS

CUSTOMER
HARMON INC.
BOLINGBROOK IL

ARCHITECT
LMN ARCHITECTS
SEATTLE WASHINGTON

GENERAL CONTRACTOR
TURNER

SUBMITTALS

| NO | REV | DATE | DESCRIPTION |
|---|---|---|---|
| 1 | -- | 1/12/12 | 1ST SUBMITTAL |
| 2 | 1 | 3/21/12 | 2ND SUBMITTAL |
| 3 | 2 | 6/5/12 | FIELD & FILE |

CONTENTS: ELEVATIONS
DWN: WP SCALE: 3/8"=1'-0"

SHEET NUMBER
313

© 2010 GARDNER METAL SYSTEMS, INC. All Rights Reserved

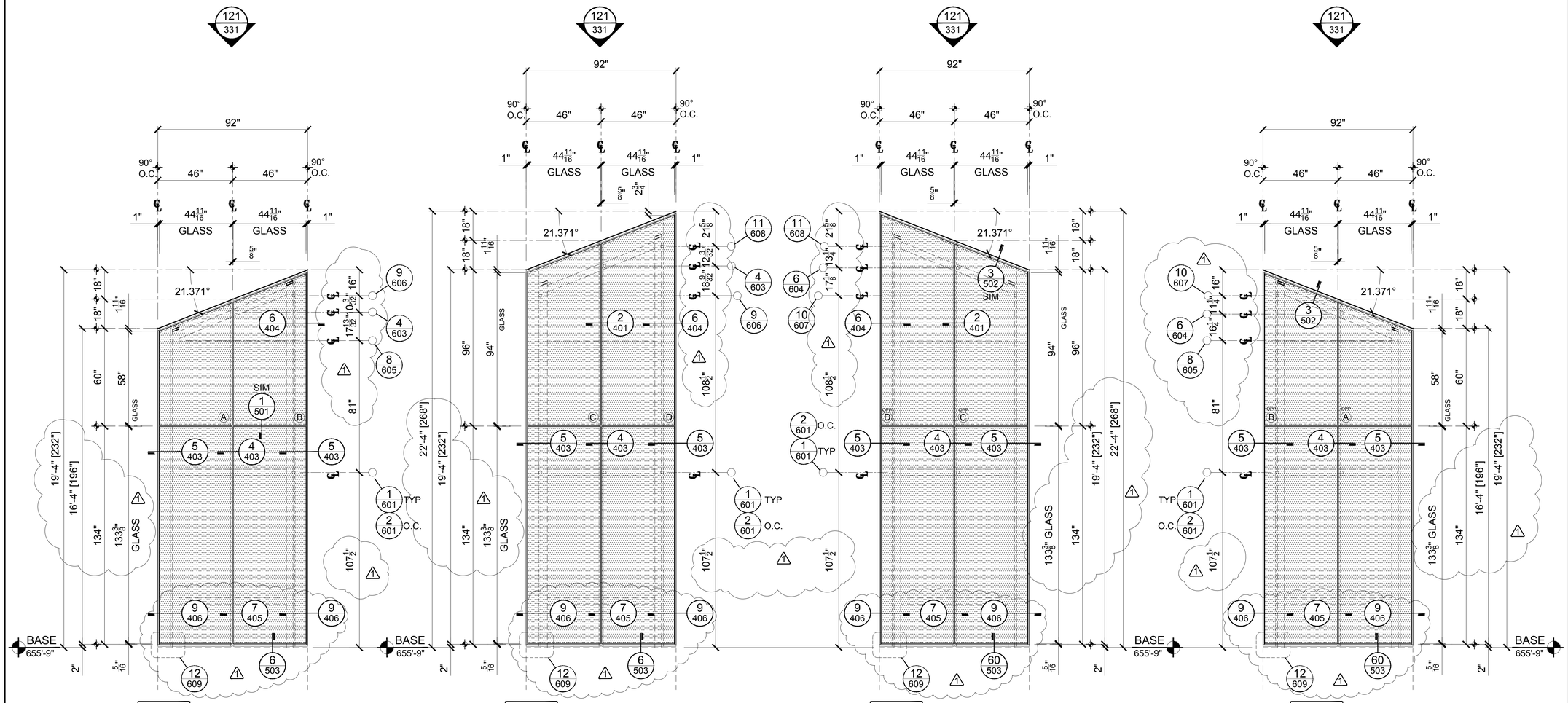


53 STACK 2S
REF NO.
REF SHT.
TOTAL QUANTITY THUS: 1

54 STACK 2S
REF NO.
REF SHT.
TOTAL QUANTITY THUS: 1

55 STACK 2S
REF NO.
REF SHT.
TOTAL QUANTITY THUS: 1

56 STACK 2S
REF NO.
REF SHT.
TOTAL QUANTITY THUS: 1

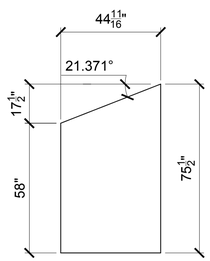


GLASS SIZE A

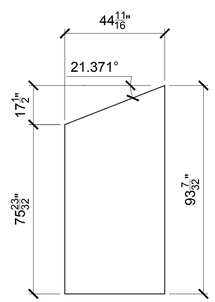


GLASS SIZE B

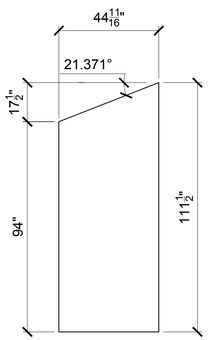


GLASS SIZE C

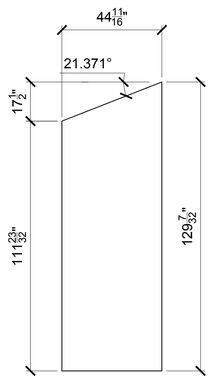


GLASS SIZE D

STACK 2S (SOUTH OF LAKESIDE)

SEE PLAN 19/212

GL-27 TYP. GLASS TYPE UNLESS NOTED OTHERWISE

GMS
WWW.GARDNERMETAL.COM

LEGENDS

PROJECT

# #337 CMMCC MECH. STACKS

## SHOP DRAWINGS

CUSTOMER
HARMON INC.
BOLINGBROOK IL

ARCHITECT
LMN ARCHITECTS
SEATTLE WASHINGTON

GENERAL CONTRACTOR
TURNER

SUBMITTALS

| NO | REV | DATE | DESCRIPTION |
|---|---|---|---|
| 1 | -- | 1/12/12 | 1ST SUBMITTAL |
| 2 | 1 | 3/21/12 | 2ND SUBMITTAL |
| 3 | 2 | 6/5/12 | FIELD & FILE |

CONTENTS: ELEVATIONS
DWN: WP SCALE: 3/8"=1'-0"

SHEET NUMBER
314

© 2010 GARDNER METAL SYSTEMS, INC. All Rights Reserved

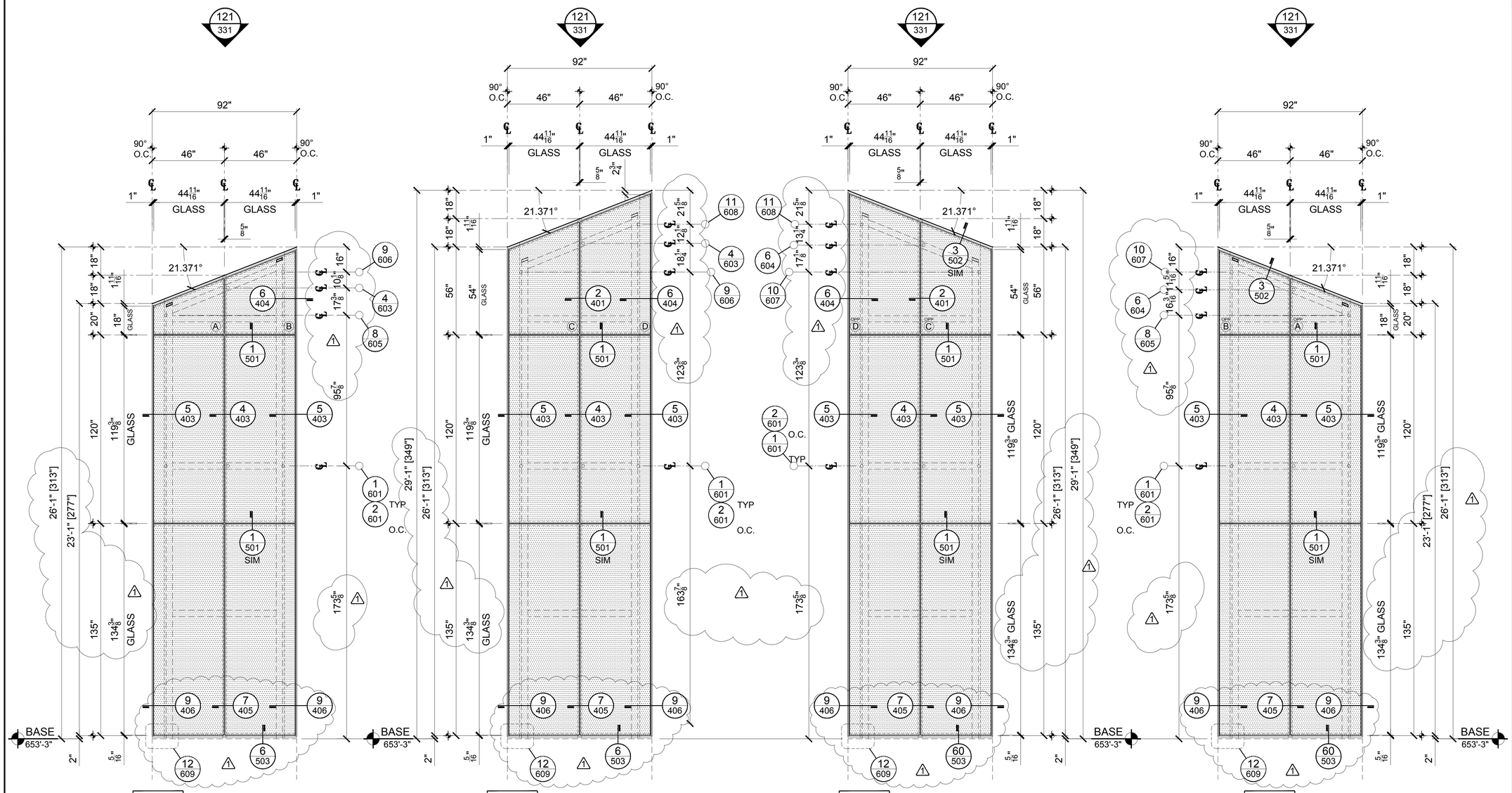


57 STACK 3S
REF NO.
REF SHT.
TOTAL QUANTITY THUS: 1

58 STACK 3S
REF NO.
REF SHT.
TOTAL QUANTITY THUS: 1

59 STACK 3S
REF NO.
REF SHT.
TOTAL QUANTITY THUS: 1

60 STACK 3S
REF NO.
REF SHT.
TOTAL QUANTITY THUS: 1

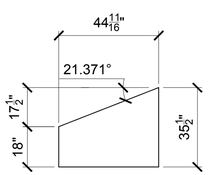


GLASS SIZE A

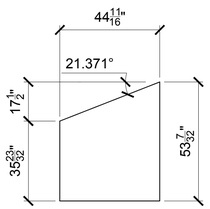


GLASS SIZE B

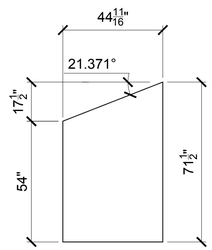


GLASS SIZE C

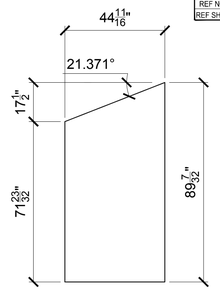


GLASS SIZE D

STACK 3S (SOUTH OF LAKESIDE)

SEE PLAN 20/213

GL-27 TYP. GLASS TYPE UNLESS NOTED OTHERWISE

GMS
WWW.GARDNERMETAL.COM

LEGENDS

PROJECT

# #337 CMMCC MECH. STACKS SHOP DRAWINGS

CUSTOMER
HARMON INC.
BOLINGBROOK IL

ARCHITECT
LMN ARCHITECTS
SEATTLE WASHINGTON

GENERAL CONTRACTOR
TURNER

SUBMITTALS

| NO | REV | DATE | DESCRIPTION |
|---|---|---|---|
| 1 | -- | 1/12/12 | 1ST SUBMITTAL |
| 2 | 1 | 3/21/12 | 2ND SUBMITTAL |
| 3 | 2 | 6/5/12 | FIELD & FILE |

CONTENTS: ELEVATIONS
DWN: WP SCALE: 3/8"=1'-0"

SHEET NUMBER
315

© 2010 GARDNER METAL SYSTEMS, INC. All Rights Reserved

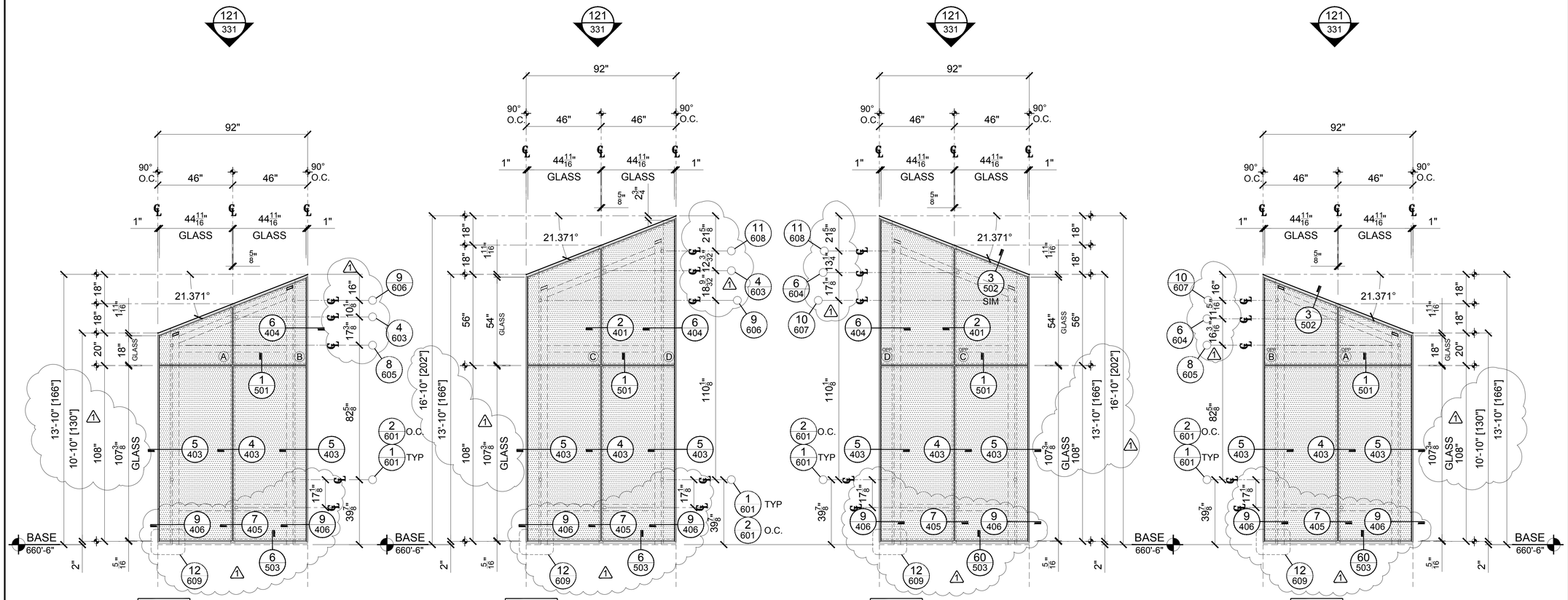


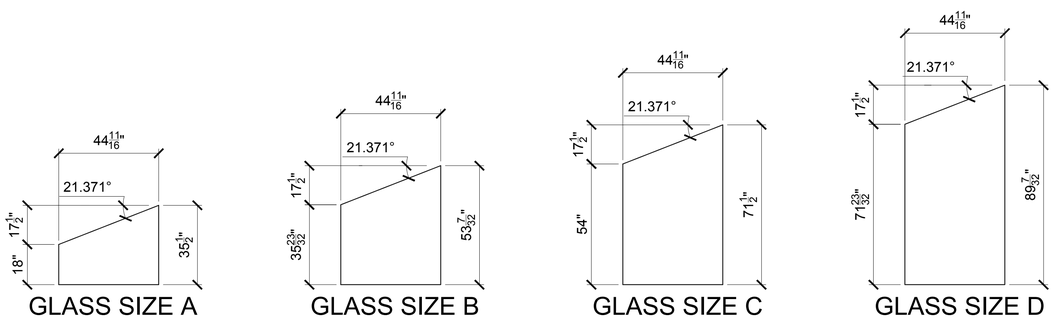


STACK 4S (SOUTH OF LAKESIDE)

SEE PLAN 21/213

GL-27 TYP. GLASS TYPE UNLESS NOTED OTHERWISE

GMS
WWW.GARDNERMETAL.COM

LEGENDS

PROJECT

# #337 CMMCC MECH. STACKS SHOP DRAWINGS

CUSTOMER
HARMON INC.
BOLINGBROOK IL

ARCHITECT
LMN ARCHITECTS
SEATTLE WASHINGTON

GENERAL CONTRACTOR
TURNER

SUBMITTALS

| NO | REV | DATE | DESCRIPTION |
|---|---|---|---|
| 1 | -- | 1/12/12 | 1ST SUBMITTAL |
| 2 | 1 | 3/21/12 | 2ND SUBMITTAL |
| 3 | 2 | 6/5/12 | FIELD & FILE |

CONTENTS: ELEVATIONS
DWN: WP SCALE: 3/8"=1'-0"

SHEET NUMBER
316

© 2010 GARDNER METAL SYSTEMS, INC. All Rights Reserved

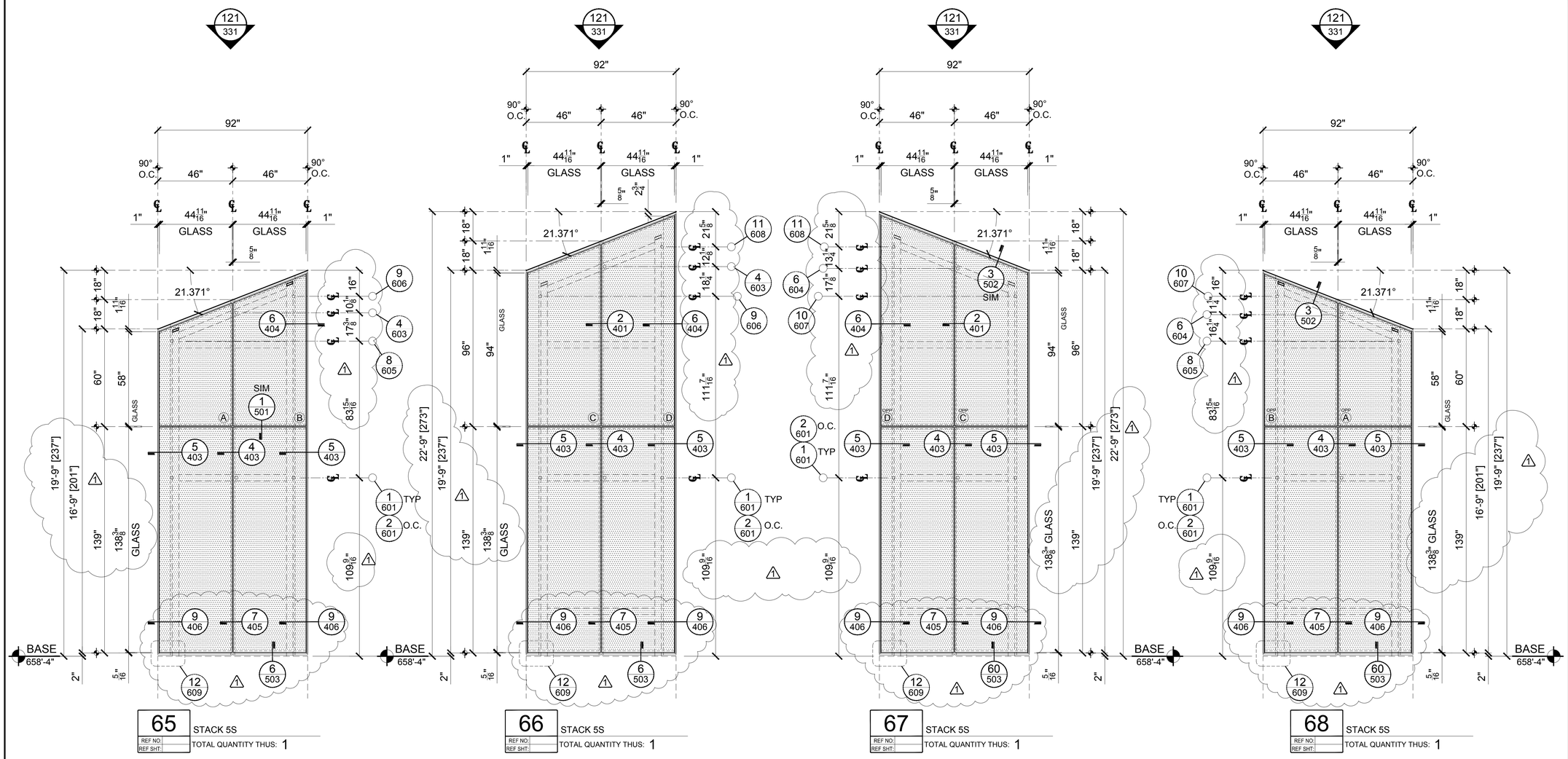


65 STACK 5S
REF NO:
REF SHT:
TOTAL QUANTITY THUS: 1

66 STACK 5S
REF NO:
REF SHT:
TOTAL QUANTITY THUS: 1

67 STACK 5S
REF NO:
REF SHT:
TOTAL QUANTITY THUS: 1

68 STACK 5S
REF NO:
REF SHT:
TOTAL QUANTITY THUS: 1

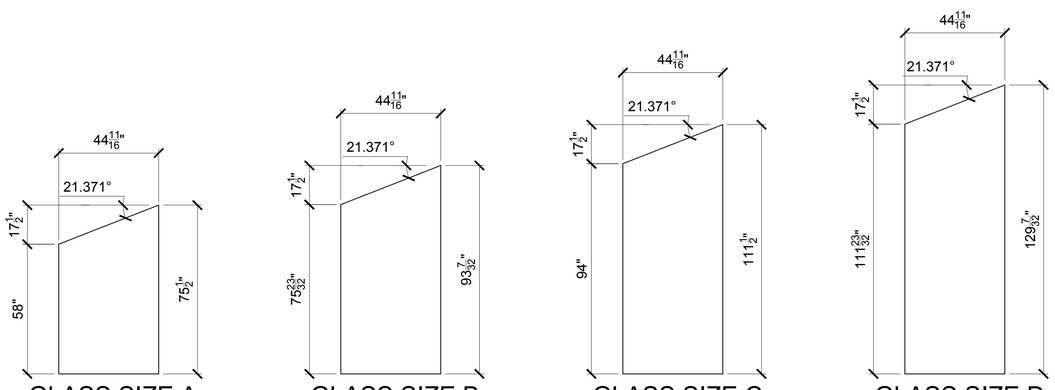


GLASS SIZE A

GLASS SIZE B

GLASS SIZE C

GLASS SIZE D

STACK 5S (SOUTH OF LAKESIDE)

SEE PLAN 22/214

GL-27 TYP. GLASS TYPE UNLESS NOTED OTHERWISE

GMS
WWW.GARDNERMETAL.COM

LEGENDS

PROJECT

# #337 CMMCC MECH. STACKS

SHOP DRAWINGS

CUSTOMER
HARMON INC.
BOLINGBROOK IL

ARCHITECT
LMN ARCHITECTS
SEATTLE WASHINGTON

GENERAL CONTRACTOR
TURNER

SUBMITTALS

| NO | REV | DATE | DESCRIPTION |
|---|---|---|---|
| 1 | -- | 1/12/12 | 1ST SUBMITTAL |
| 2 | 1 | 3/21/12 | 2ND SUBMITTAL |
| 3 | 2 | 6/5/12 | FIELD & FILE |

CONTENTS: ELEVATIONS
DWN: WP SCALE: 3/8"=1'-0"

SHEET NUMBER
317

© 2010 GARDNER METAL SYSTEMS, INC. All Rights Reserved

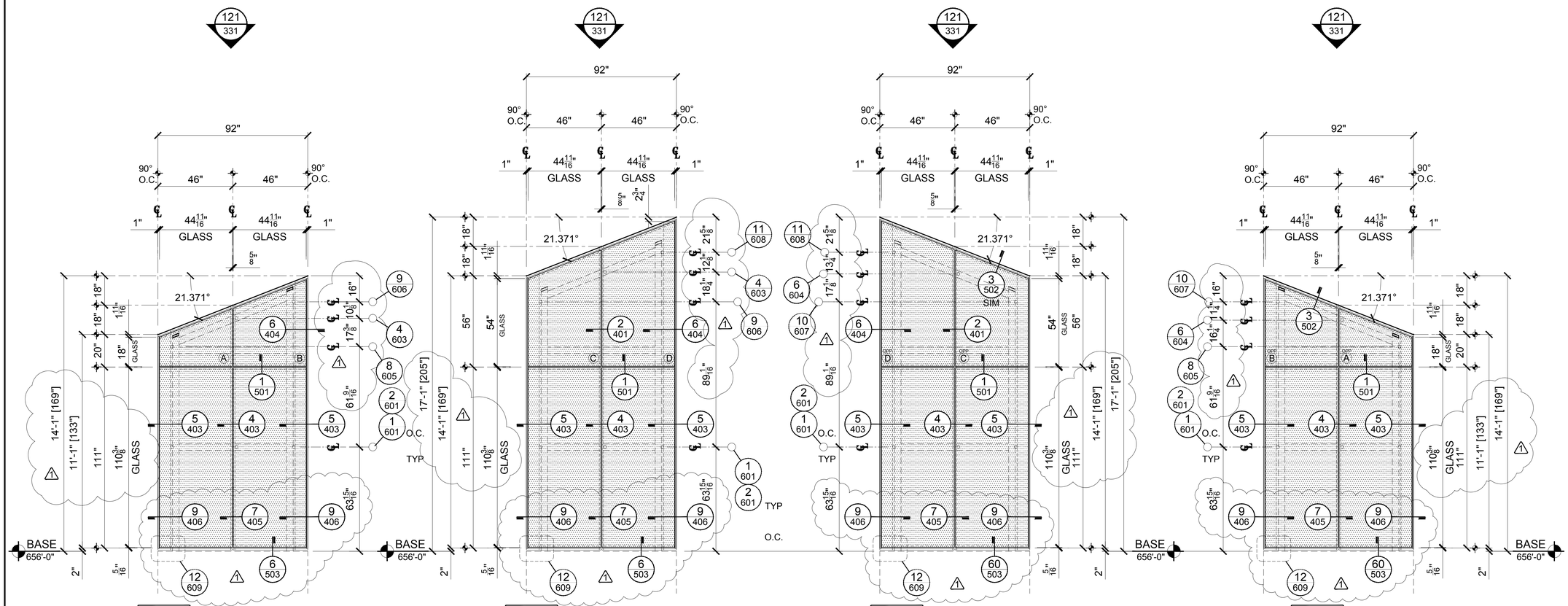


69 STACK 6S
REF NO:
REF SHT:
TOTAL QUANTITY THUS: 1

70 STACK 6S
REF NO:
REF SHT:
TOTAL QUANTITY THUS: 1

71 STACK 6S
REF NO:
REF SHT:
TOTAL QUANTITY THUS: 1

72 STACK 6S
REF NO:
REF SHT:
TOTAL QUANTITY THUS: 1

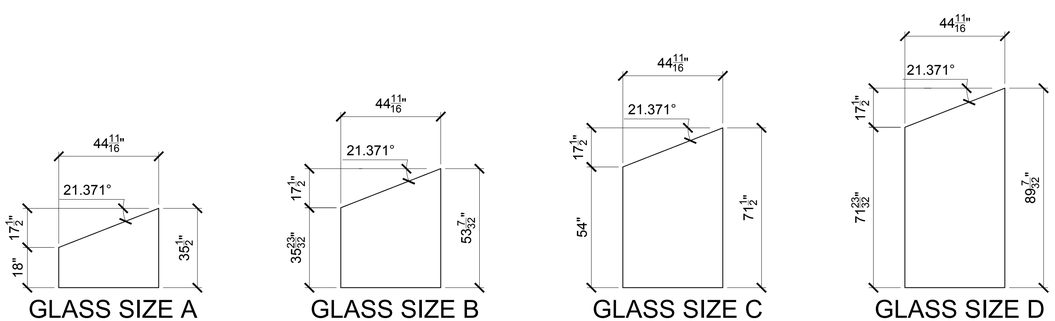


STACK 6S (SOUTH OF LAKESIDE)

SEE PLAN 23/214

GL-27 TYP. GLASS TYPE UNLESS NOTED OTHERWISE

GMS
WWW.GARDNERMETAL.COM

LEGENDS

PROJECT

# #337 CMMCC MECH. STACKS

SHOP DRAWINGS

CUSTOMER
HARMON INC.
BOLINGBROOK IL

ARCHITECT
LMN ARCHITECTS
SEATTLE WASHINGTON

GENERAL CONTRACTOR
TURNER

SUBMITTALS

| NO | REV | DATE | DESCRIPTION |
|---|---|---|---|
| 1 | -- | 1/12/12 | 1ST SUBMITTAL |
| 2 | 1 | 3/21/12 | 2ND SUBMITTAL |
| 3 | 2 | 6/5/12 | FIELD & FILE |

CONTENTS: ELEVATIONS
DWN: WP SCALE: 3/8"=1'-0"

SHEET NUMBER
318

© 2010 GARDNER METAL SYSTEMS, INC. All Rights Reserved

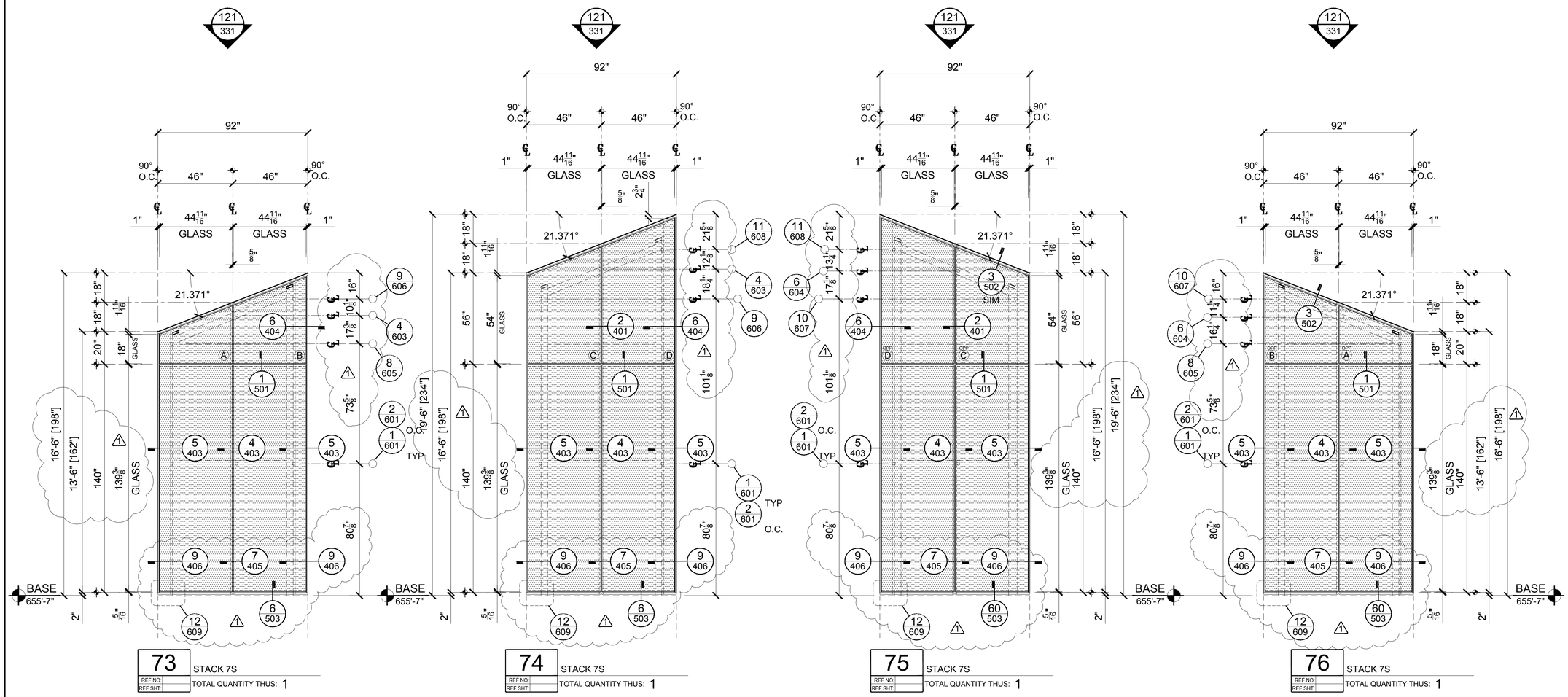


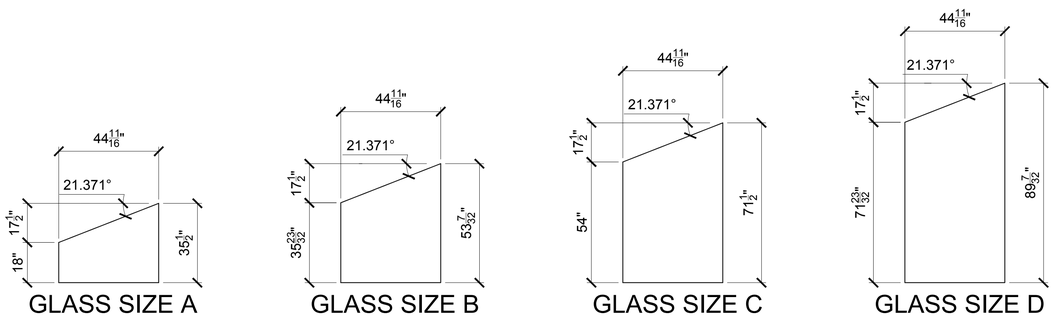


STACK 7S (SOUTH OF LAKESIDE)

SEE PLAN 24/215

GL-27 TYP. GLASS TYPE UNLESS NOTED OTHERWISE

GMS
WWW.GARDNERMETAL.COM

LEGENDS

PROJECT

# #337 CMMCC MECH. STACKS SHOP DRAWINGS

CUSTOMER
HARMON INC.
BOLINGBROOK IL

ARCHITECT
LMN ARCHITECTS
SEATTLE WASHINGTON

GENERAL CONTRACTOR
TURNER

SUBMITTALS

| NO | REV | DATE | DESCRIPTION |
|---|---|---|---|
| 1 | -- | 1/12/12 | 1ST SUBMITTAL |
| 2 | 1 | 3/21/12 | 2ND SUBMITTAL |
| 3 | 2 | 6/5/12 | FIELD & FILE |

CONTENTS: ELEVATIONS
DWN: WP SCALE: 3/8"=1'-0"

SHEET NUMBER
319

© 2010 GARDNER METAL SYSTEMS, INC. All Rights Reserved

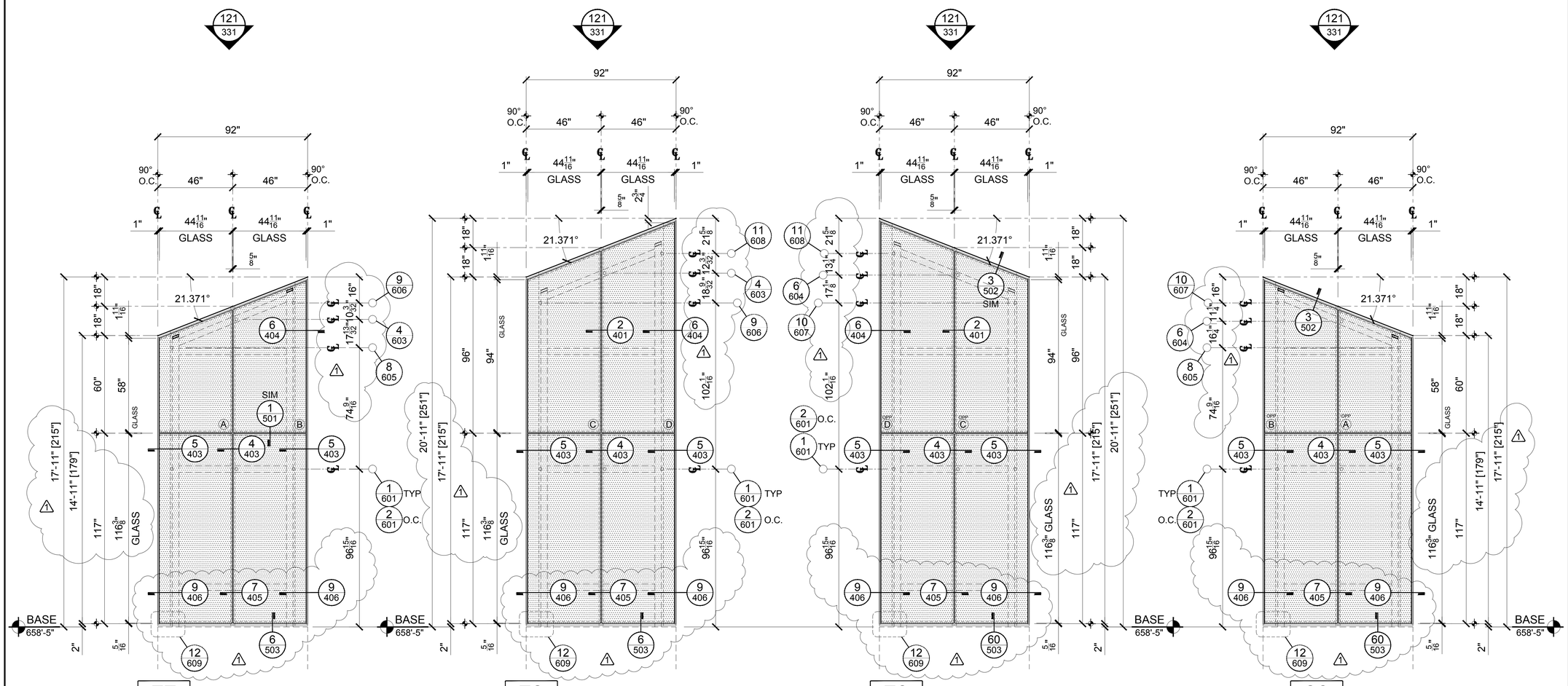


77 STACK 8S
REF NO:
REF SHT:
TOTAL QUANTITY THUS: 1

78 STACK 8S
REF NO:
REF SHT:
TOTAL QUANTITY THUS: 1

79 STACK 8S
REF NO:
REF SHT:
TOTAL QUANTITY THUS: 1

80 STACK 8S
REF NO:
REF SHT:
TOTAL QUANTITY THUS: 1

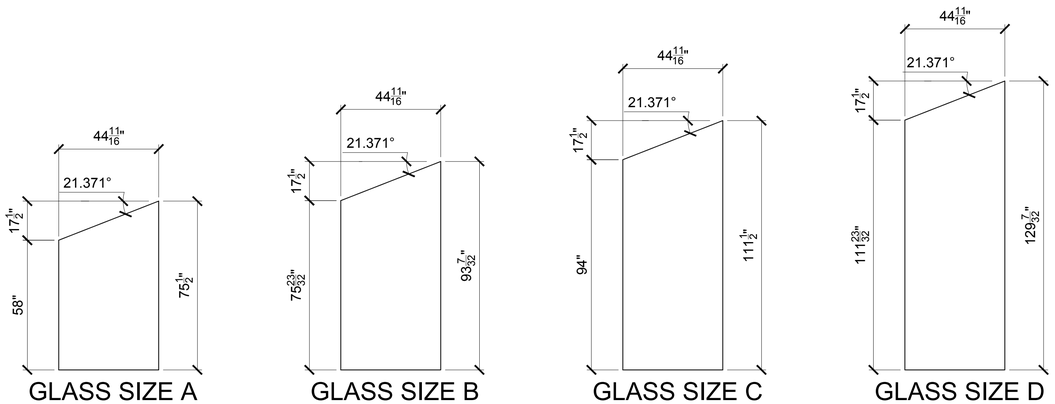


GLASS SIZE A

GLASS SIZE B

GLASS SIZE C

GLASS SIZE D

STACK 8S (SOUTH OF LAKESIDE)

SEE PLAN 25/215

GL-27 TYP. GLASS TYPE UNLESS NOTED OTHERWISE

GMS
WWW.GARDNERMETAL.COM

LEGENDS

PROJECT

# #337 CMMCC MECH. STACKS

SHOP DRAWINGS

CUSTOMER
HARMON INC.
BOLINGBROOK IL

ARCHITECT
LMN ARCHITECTS
SEATTLE WASHINGTON

GENERAL CONTRACTOR
TURNER

SUBMITTALS

| NO | REV | DATE | DESCRIPTION |
|---|---|---|---|
| 1 | -- | 1/12/12 | 1ST SUBMITTAL |
| 2 | 1 | 3/21/12 | 2ND SUBMITTAL |
| 3 | 2 | 6/5/12 | FIELD & FILE |

CONTENTS: ELEVATIONS
DWN: WP SCALE: 3/8"=1'-0"

SHEET NUMBER
320

© 2010 GARDNER METAL SYSTEMS, INC. All Rights Reserved

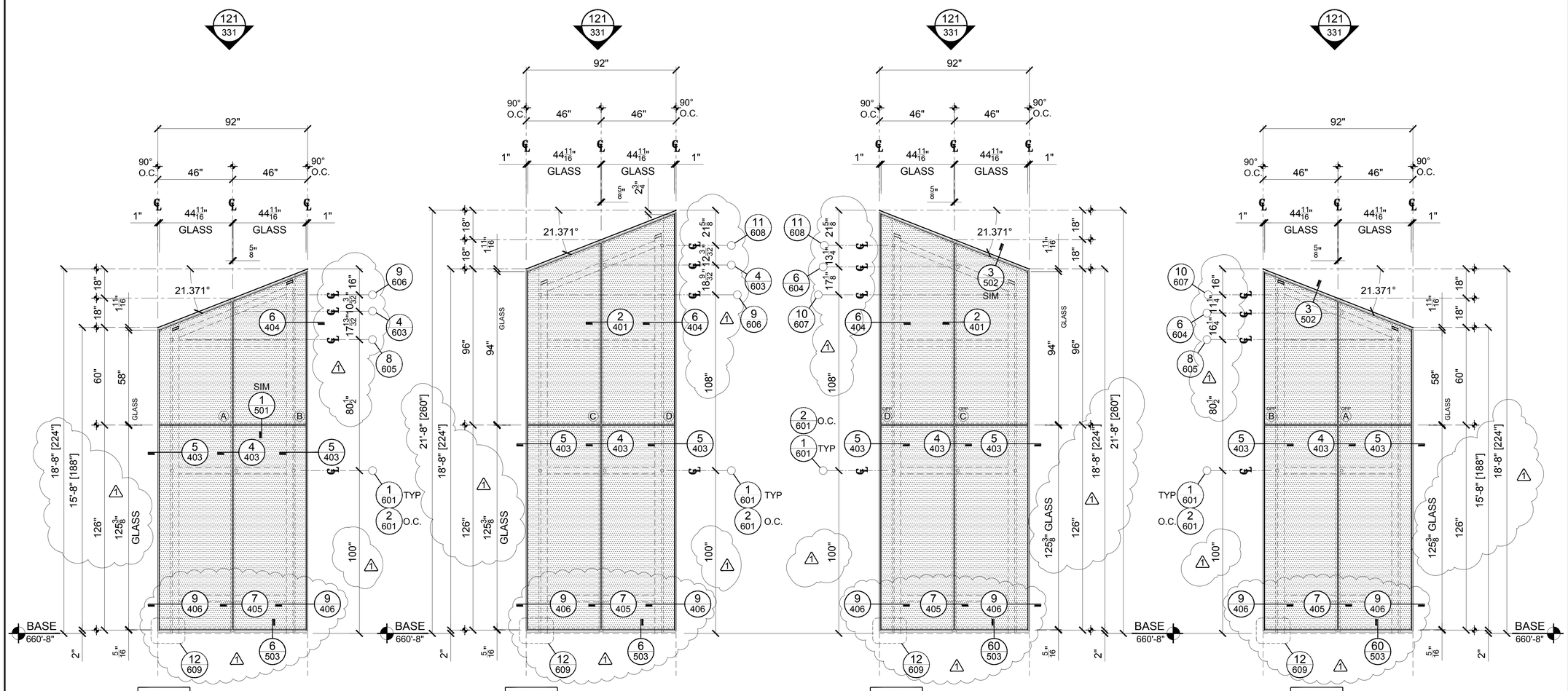


| 81 | STACK 9S |
|---|---|
| REF NO: | |
| REF SHT: | TOTAL QUANTITY THUS: 1 |

| 82 | STACK 9S |
|---|---|
| REF NO: | |
| REF SHT: | TOTAL QUANTITY THUS: 1 |

| 83 | STACK 9S |
|---|---|
| REF NO: | |
| REF SHT: | TOTAL QUANTITY THUS: 1 |

| 84 | STACK 9S |
|---|---|
| REF NO: | |
| REF SHT: | TOTAL QUANTITY THUS: 1 |

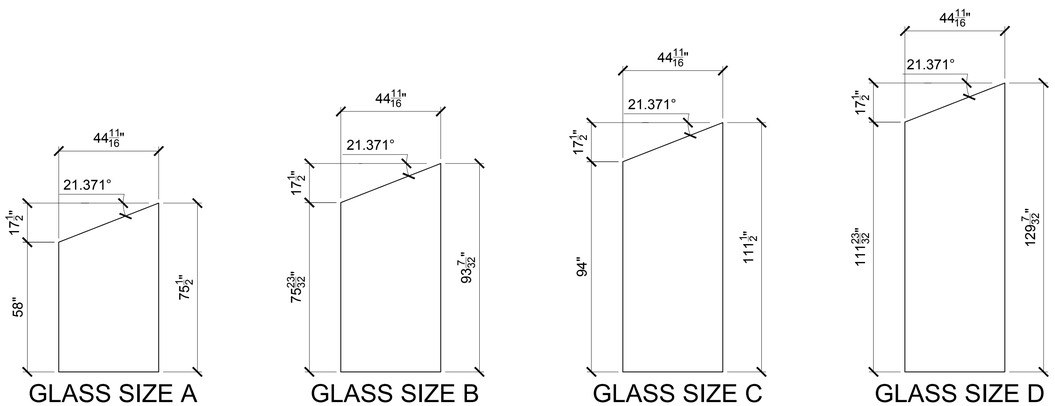


GLASS SIZE A

GLASS SIZE B

GLASS SIZE C

GLASS SIZE D

STACK 9S (SOUTH OF LAKESIDE)

SEE PLAN 26/216

GL-27 TYP. GLASS TYPE UNLESS NOTED OTHERWISE

GMS
WWW.GARDNERMETAL.COM

LEGENDS

PROJECT

# #337 CMMCC MECH. STACKS SHOP DRAWINGS

CUSTOMER
HARMON INC.
BOLINGBROOK IL

ARCHITECT
LMN ARCHITECTS
SEATTLE WASHINGTON

GENERAL CONTRACTOR
TURNER

SUBMITTALS

| NO | REV | DATE | DESCRIPTION |
|---|---|---|---|
| 1 | -- | 1/12/12 | 1ST SUBMITTAL |
| 2 | 1 | 3/21/12 | 2ND SUBMITTAL |
| 3 | 2 | 6/5/12 | FIELD & FILE |

CONTENTS: ELEVATIONS
DWN: WP SCALE: 3/8"=1'-0"

SHEET NUMBER
321

© 2010 GARDNER METAL SYSTEMS, INC. All Rights Reserved

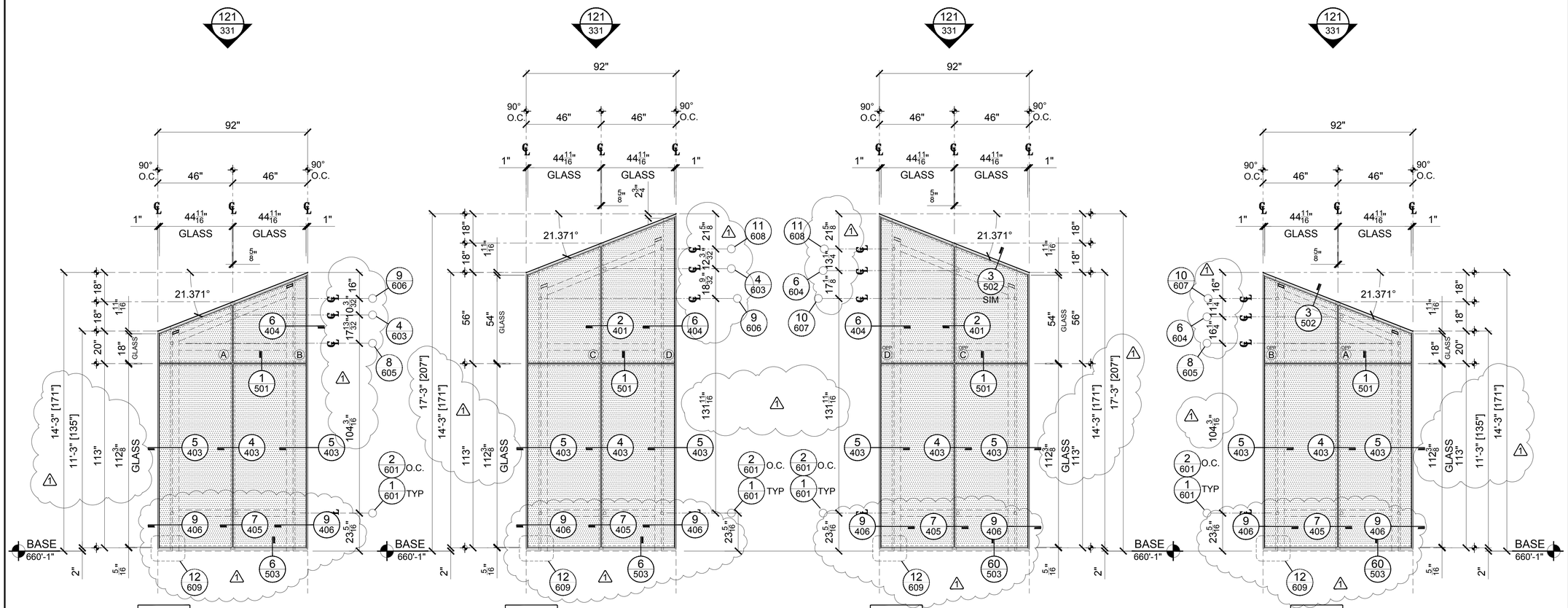


| 85 | STACK 10S |
|---|---|
| REF NO: | TOTAL QUANTITY THUS: 1 |
| REF SHT: | |

| 86 | STACK 10S |
|---|---|
| REF NO: | TOTAL QUANTITY THUS: 1 |
| REF SHT: | |

| 87 | STACK 10S |
|---|---|
| REF NO: | TOTAL QUANTITY THUS: 1 |
| REF SHT: | |

| 88 | STACK 10S |
|---|---|
| REF NO: | TOTAL QUANTITY THUS: 1 |
| REF SHT: | |

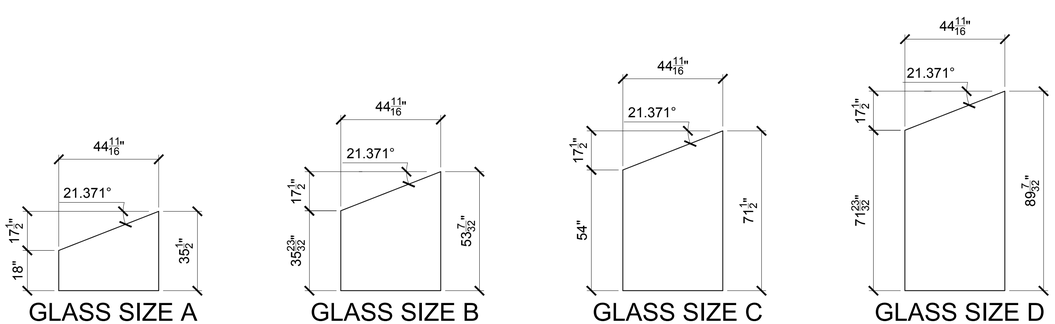


GLASS SIZE A

GLASS SIZE B

GLASS SIZE C

GLASS SIZE D

STACK 10S (SOUTH OF LAKESIDE)

SEE PLAN 27/216

GL-27 TYP. GLASS TYPE UNLESS NOTED OTHERWISE

GMS
WWW.GARDNERMETAL.COM

LEGENDS

PROJECT

# #337 CMMCC MECH. STACKS SHOP DRAWINGS

CUSTOMER

HARMON INC.
BOLINGBROOK IL

ARCHITECT

LMN ARCHITECTS
SEATTLE WASHINGTON

GENERAL CONTRACTOR

TURNER

SUBMITTALS

| NO | REV | DATE | DESCRIPTION |
|---|---|---|---|
| 1 | -- | 1/12/12 | 1ST SUBMITTAL |
| 2 | 1 | 3/21/12 | 2ND SUBMITTAL |
| 3 | 2 | 6/5/12 | FIELD & FILE |

CONTENTS: ELEVATIONS
DWN: WP SCALE: 3/8"=1'-0"

SHEET NUMBER

322

© 2010 GARDNER METAL SYSTEMS, INC. All Rights Reserved

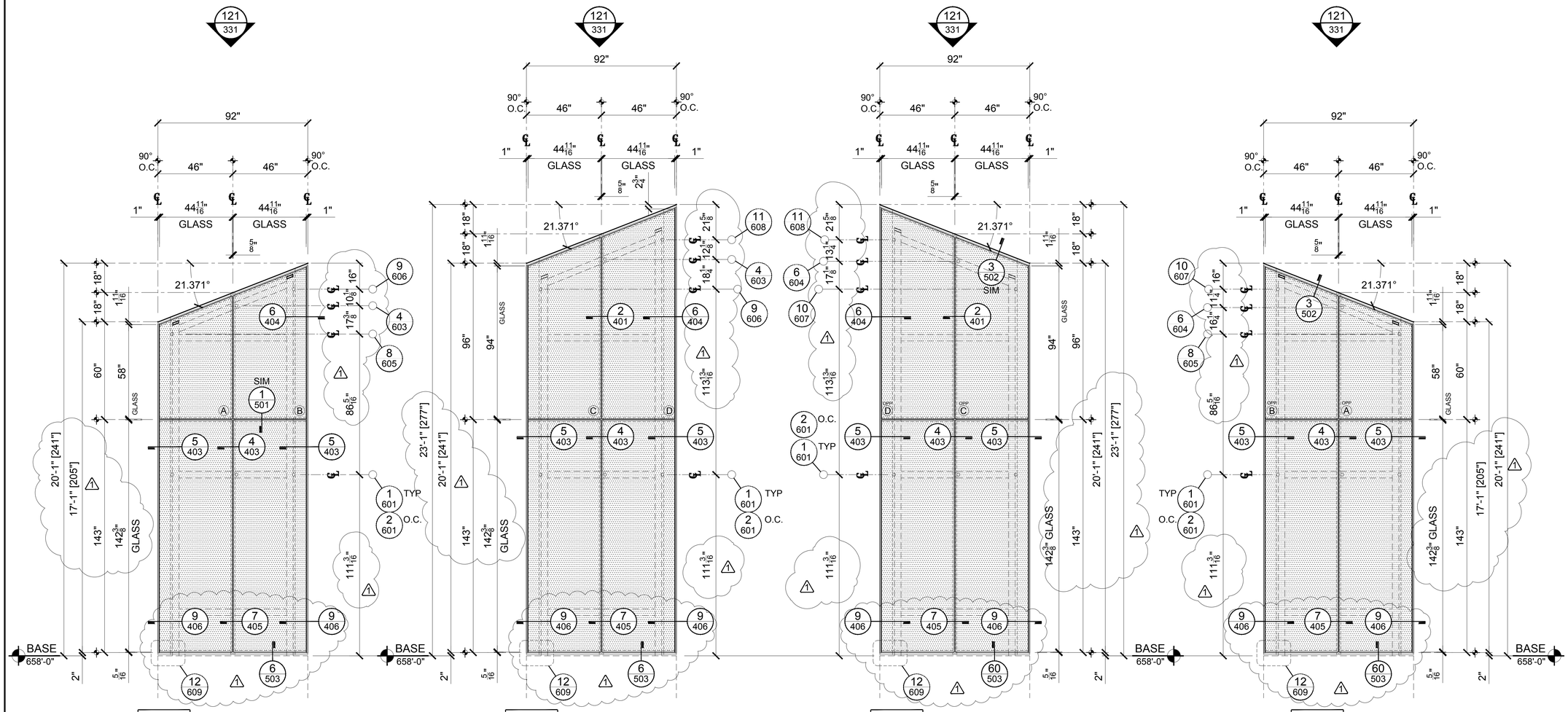


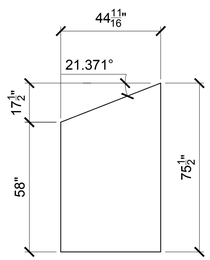


GLASS SIZE A

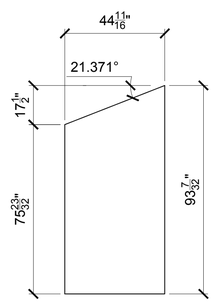


GLASS SIZE B

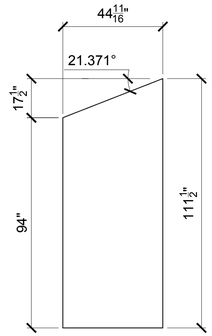


GLASS SIZE C

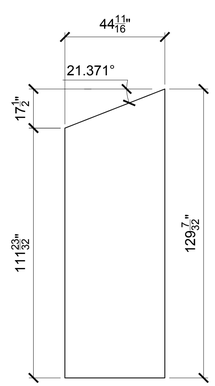


GLASS SIZE D

STACK 11S (SOUTH OF LAKESIDE)

SEE PLAN 28/217

GL-27 TYP. GLASS TYPE UNLESS NOTED OTHERWISE

GMS
WWW.GARDNERMETAL.COM

LEGENDS

PROJECT

# #337 CMMCC MECH. STACKS

SHOP DRAWINGS

CUSTOMER
HARMON INC.
BOLINGBROOK IL

ARCHITECT
LMN ARCHITECTS
SEATTLE WASHINGTON

GENERAL CONTRACTOR
TURNER

SUBMITTALS

| NO | REV | DATE | DESCRIPTION |
|---|---|---|---|
| 1 | -- | 1/12/12 | 1ST SUBMITTAL |
| 2 | 1 | 3/21/12 | 2ND SUBMITTAL |
| 3 | 2 | 6/5/12 | FIELD & FILE |

CONTENTS: ELEVATIONS
DWN: WP SCALE: 3/8"=1'-0"

SHEET NUMBER
323

© 2010 GARDNER METAL SYSTEMS, INC. All Rights Reserved

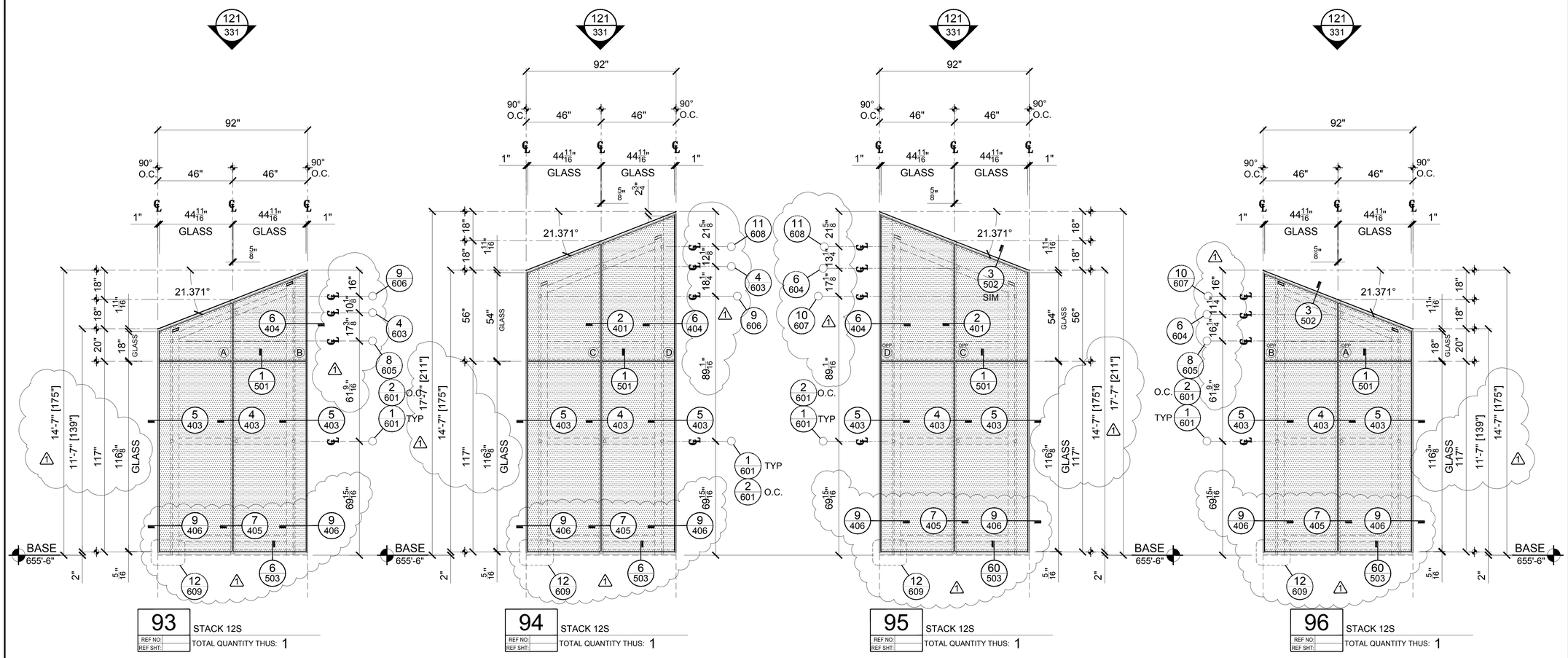


93 STACK 12S
REF NO
REF SHT
TOTAL QUANTITY THUS: 1

94 STACK 12S
REF NO
REF SHT
TOTAL QUANTITY THUS: 1

95 STACK 12S
REF NO
REF SHT
TOTAL QUANTITY THUS: 1

96 STACK 12S
REF NO
REF SHT
TOTAL QUANTITY THUS: 1

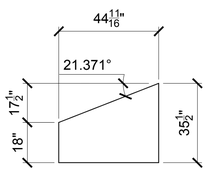


GLASS SIZE A

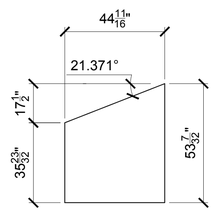


GLASS SIZE B

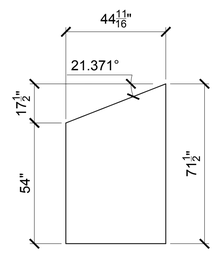


GLASS SIZE C

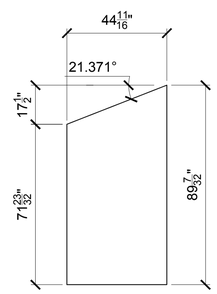


GLASS SIZE D

STACK 12S (SOUTH OF LAKESIDE)

SEE PLAN 29/217

GL-27 TYP. GLASS TYPE UNLESS NOTED OTHERWISE

GMS
WWW.GARDNERMETAL.COM

LEGENDS

PROJECT

# #337 CMMCC MECH. STACKS SHOP DRAWINGS

CUSTOMER
HARMON INC.
BOLINGBROOK IL

ARCHITECT
LMN ARCHITECTS
SEATTLE WASHINGTON

GENERAL CONTRACTOR
TURNER

SUBMITTALS

| NO | REV | DATE | DESCRIPTION |
|---|---|---|---|
| 1 | -- | 1/12/12 | 1ST SUBMITTAL |
| 2 | 1 | 3/21/12 | 2ND SUBMITTAL |
| 3 | 2 | 6/5/12 | FIELD & FILE |

CONTENTS: ELEVATIONS
DWN: WP SCALE: 3/8"=1'-0"

SHEET NUMBER
324

© 2010 GARDNER METAL SYSTEMS, INC. All Rights Reserved

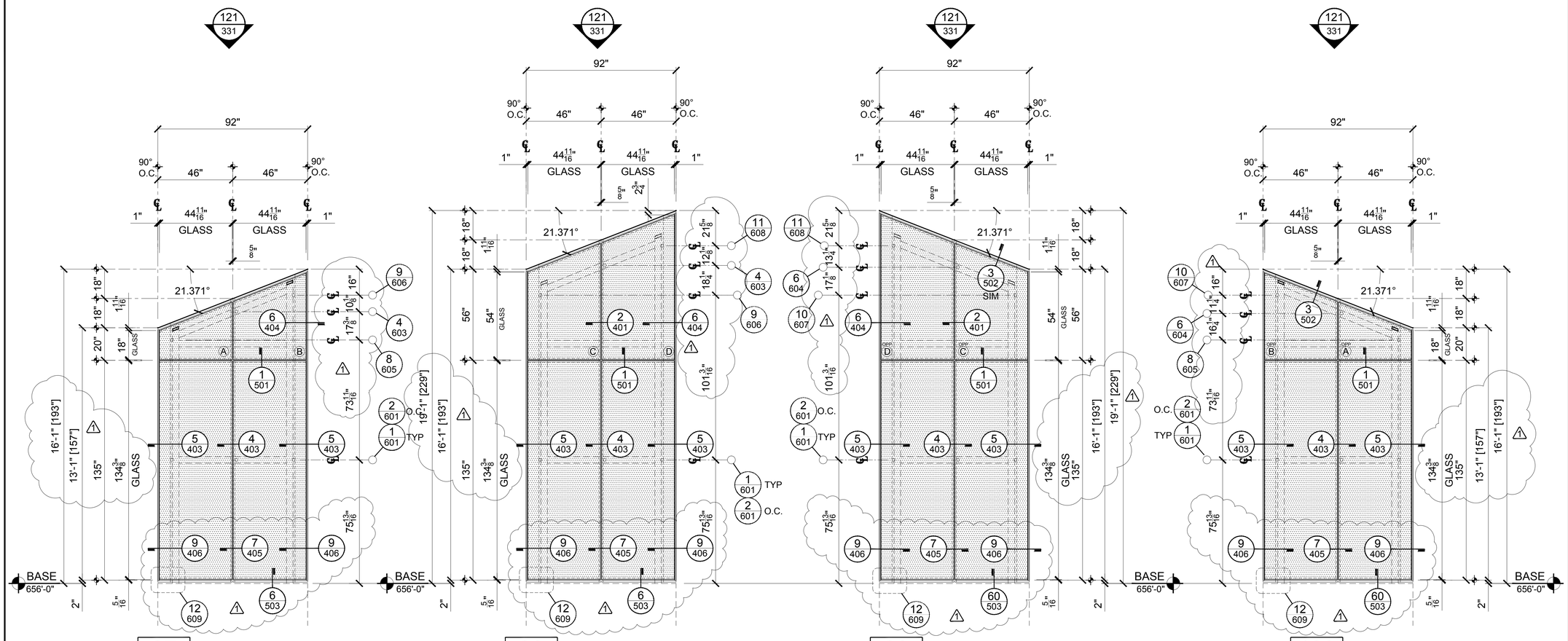


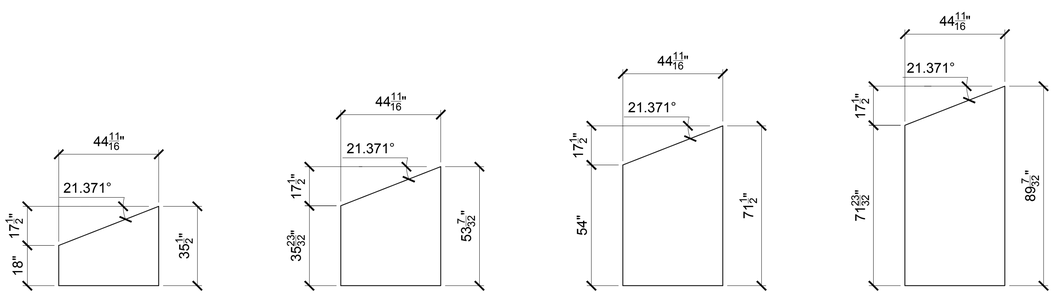


STACK 13S (SOUTH OF LAKESIDE)

SEE PLAN 30/218

GL-27 TYP. GLASS TYPE UNLESS NOTED OTHERWISE

WWW.GARDNERMETAL.COM

LEGENDS

PROJECT

# #337 CMMCC MECH. STACKS

SHOP DRAWINGS

CUSTOMER

HARMON INC.
BOLINGBROOK IL

ARCHITECT

LMN ARCHITECTS
SEATTLE WASHINGTON

GENERAL CONTRACTOR

TURNER

SUBMITTALS

| NO | REV | DATE | DESCRIPTION |
|---|---|---|---|
| 1 | -- | 1/12/12 | 1ST SUBMITTAL |
| 2 | 1 | 3/21/12 | 2ND SUBMITTAL |
| 3 | 2 | 6/5/12 | FIELD & FILE |

CONTENTS: ELEVATIONS
DWN: WP SCALE: 3/8"=1'-0"

SHEET NUMBER

325

© 2010 GARDNER METAL SYSTEMS, INC. All Rights Reserved

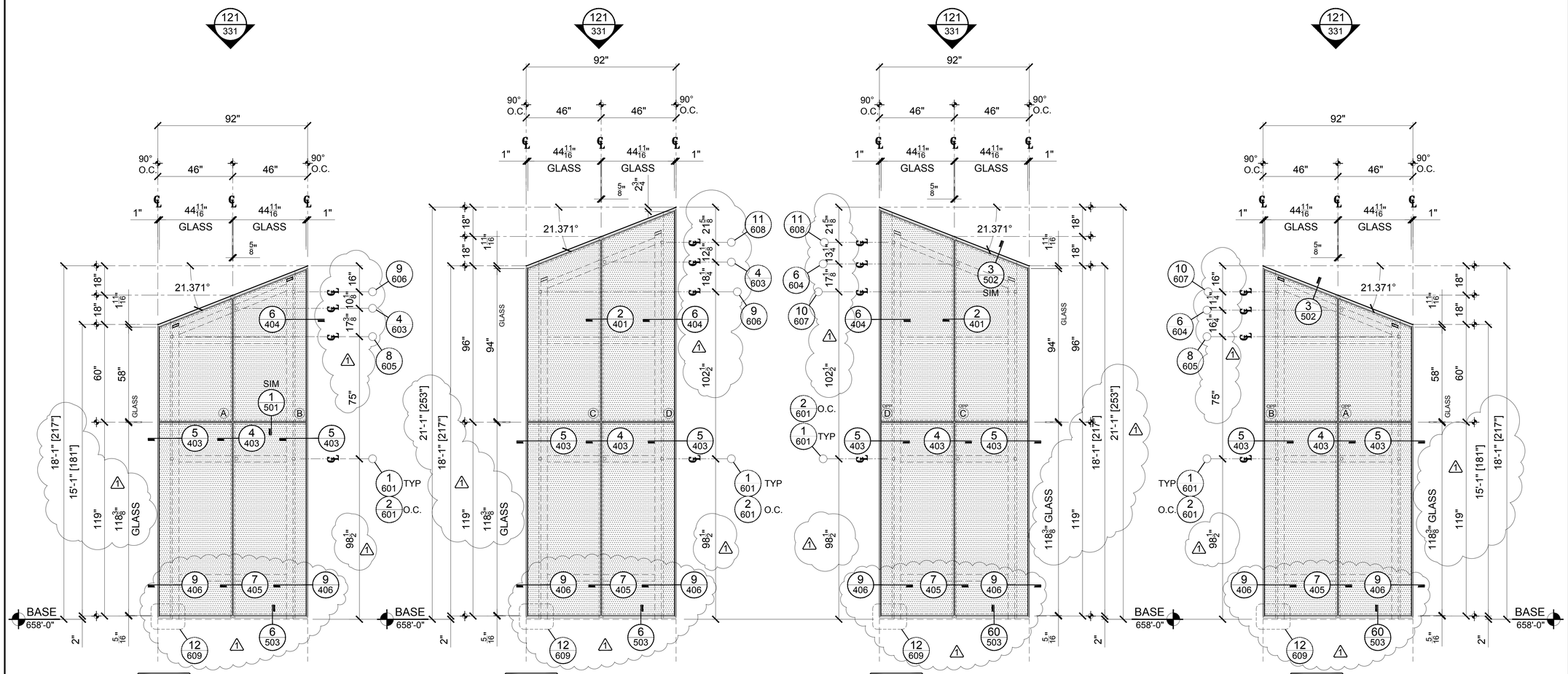


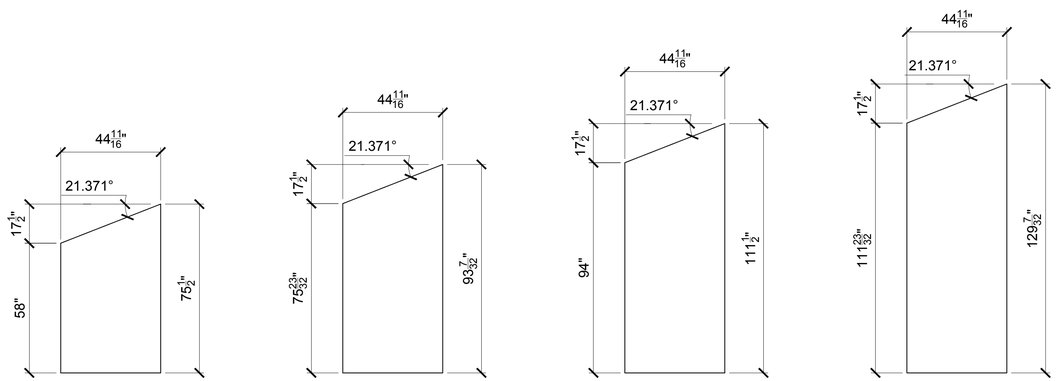


STACK 14S (SOUTH OF LAKESIDE)

SEE PLAN 31/218

GL-27 TYP. GLASS TYPE UNLESS NOTED OTHERWISE

GMS
WWW.GARDNERMETAL.COM

LEGENDS

PROJECT

# #337 CMMCC MECH. STACKS SHOP DRAWINGS

CUSTOMER
HARMON INC.
BOLINGBROOK IL

ARCHITECT
LMN ARCHITECTS
SEATTLE WASHINGTON

GENERAL CONTRACTOR
TURNER

SUBMITTALS

| NO | REV | DATE | DESCRIPTION |
|---|---|---|---|
| 1 | -- | 1/12/12 | 1ST SUBMITTAL |
| 2 | 1 | 3/21/12 | 2ND SUBMITTAL |
| 3 | 2 | 6/5/12 | FIELD & FILE |

CONTENTS: ELEVATIONS
DWN: WP SCALE: 3/8"=1'-0"

SHEET NUMBER
326

© 2010 GARDNER METAL SYSTEMS, INC. All Rights Reserved

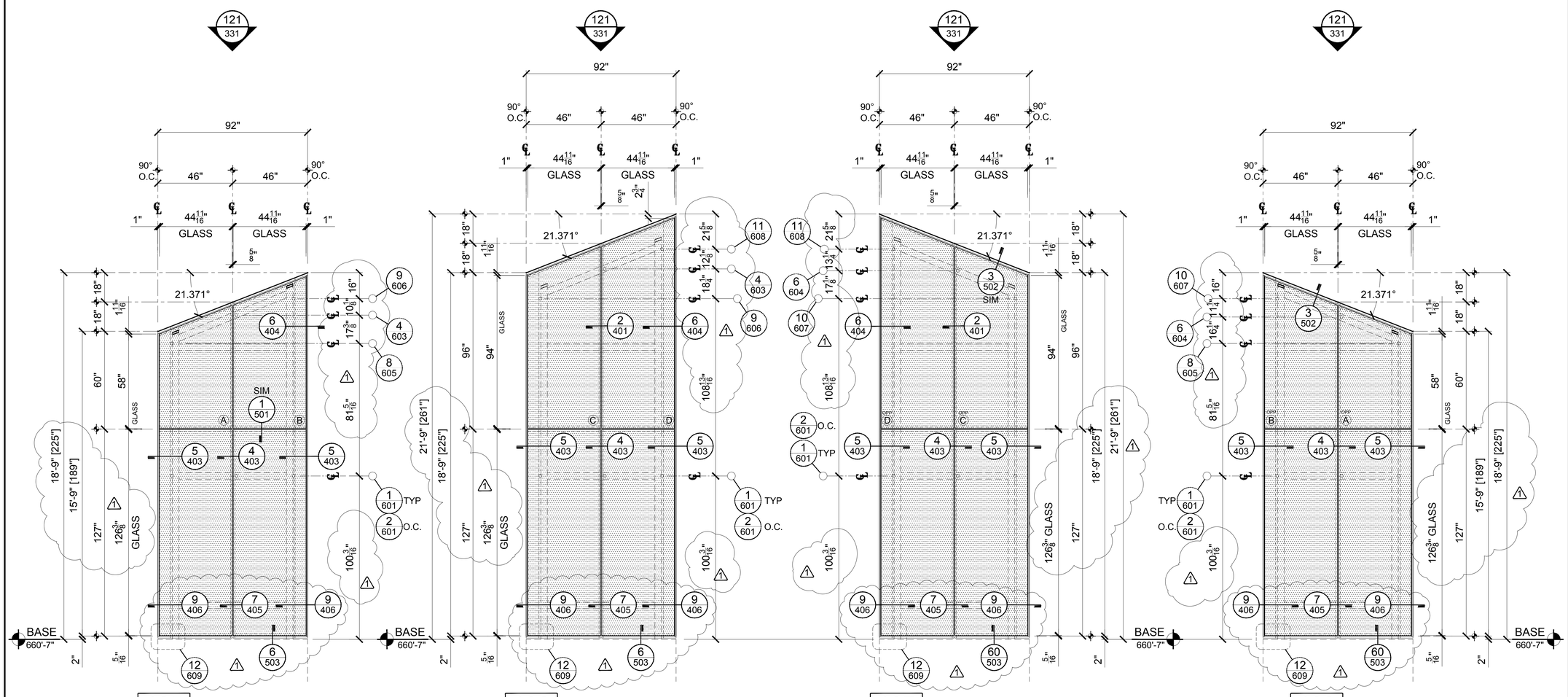


105 STACK 15S
REF NO:
REF SHT:
TOTAL QUANTITY THUS: 1

106 STACK 15S
REF NO:
REF SHT:
TOTAL QUANTITY THUS: 1

107 STACK 15S
REF NO:
REF SHT:
TOTAL QUANTITY THUS: 1

108 STACK 15S
REF NO:
REF SHT:
TOTAL QUANTITY THUS: 1

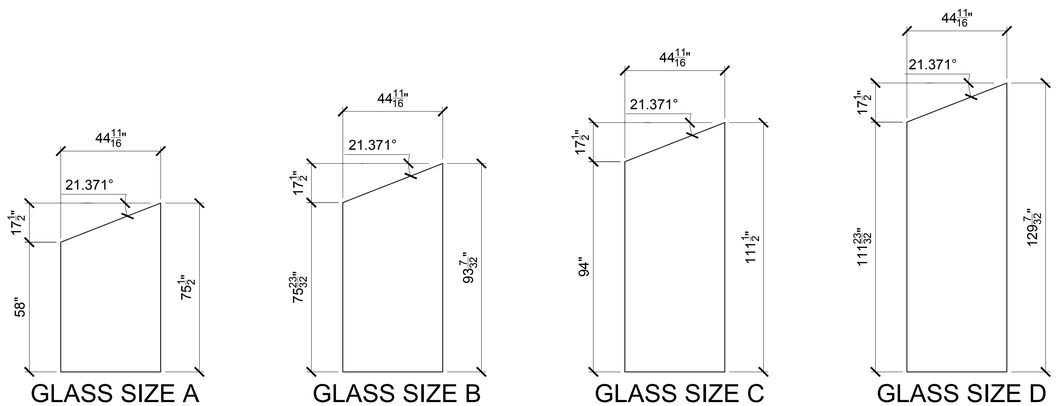


GLASS SIZE A

GLASS SIZE B

GLASS SIZE C

GLASS SIZE D

STACK 15S (SOUTH OF LAKESIDE)

SEE PLAN 32/219

GL-27 TYP. GLASS TYPE UNLESS NOTED OTHERWISE

GMS
WWW.GARDNERMETAL.COM

LEGENDS

PROJECT

# #337 CMMCC MECH. STACKS SHOP DRAWINGS

CUSTOMER
HARMON INC.
BOLINGBROOK IL

ARCHITECT
LMN ARCHITECTS
SEATTLE WASHINGTON

GENERAL CONTRACTOR
TURNER

SUBMITTALS

| NO | REV | DATE | DESCRIPTION |
|---|---|---|---|
| 1 | -- | 1/12/12 | 1ST SUBMITTAL |
| 2 | 1 | 3/21/12 | 2ND SUBMITTAL |
| 3 | 2 | 6/5/12 | FIELD & FILE |

CONTENTS: ELEVATIONS
DWN: WP SCALE: 3/8"=1'-0"

SHEET NUMBER
327

© 2010 GARDNER METAL SYSTEMS, INC. All Rights Reserved

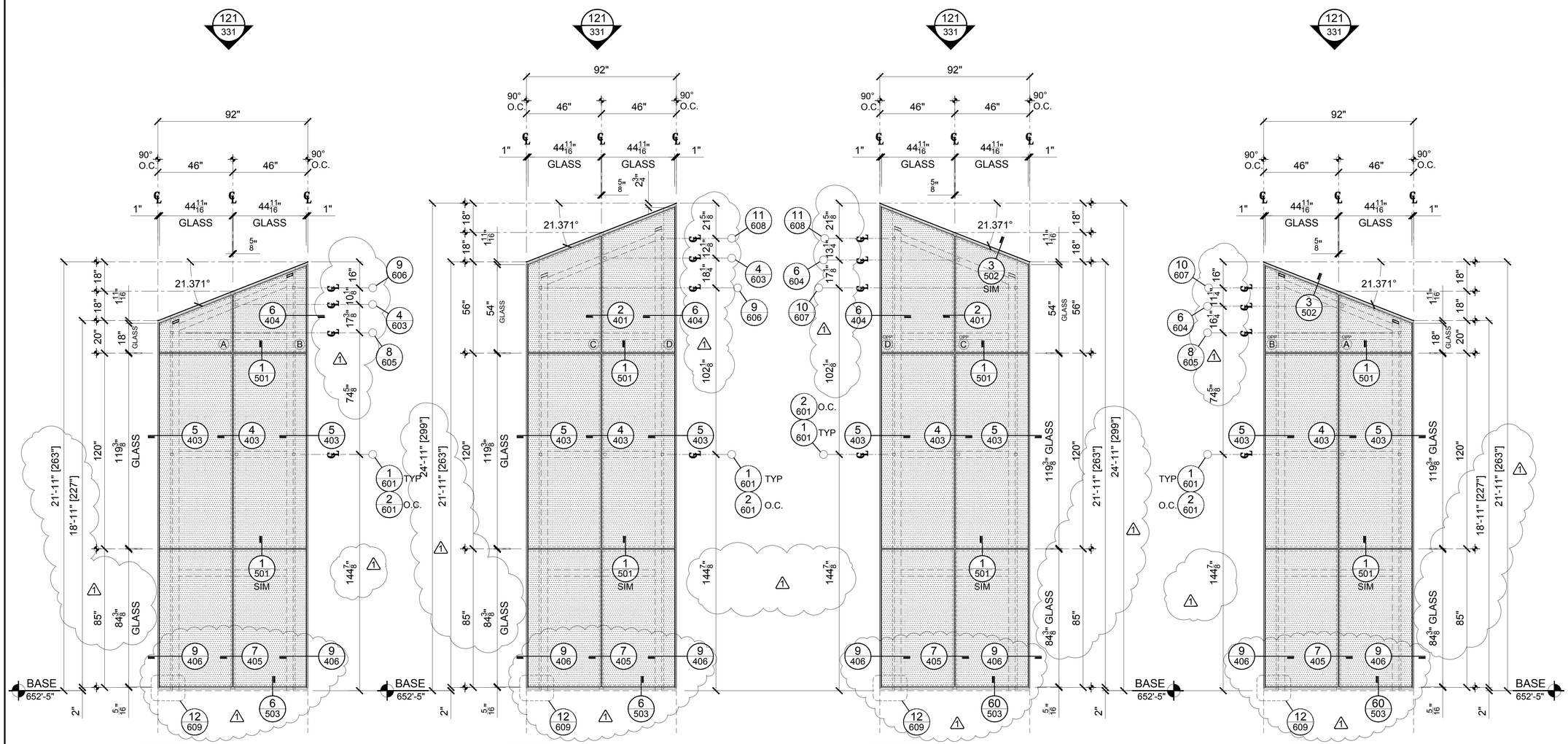


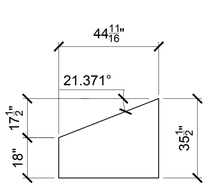


GLASS SIZE A

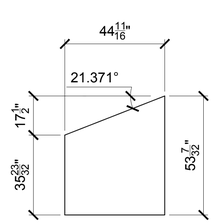


GLASS SIZE B

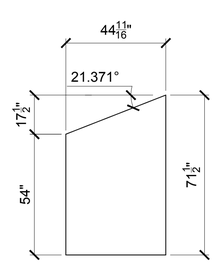


GLASS SIZE C

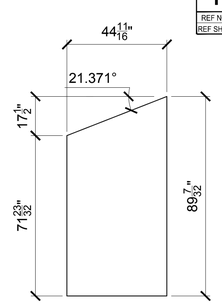


GLASS SIZE D

STACK 16S (SOUTH OF LAKESIDE)

SEE PLAN 33/219

GL-27 TYP. GLASS TYPE UNLESS NOTED OTHERWISE

GMS
WWW.GARDNERMETAL.COM

LEGENDS

PROJECT

# #337 CMMCC MECH. STACKS

SHOP DRAWINGS

CUSTOMER
HARMON INC.
BOLINGBROOK IL

ARCHITECT
LMN ARCHITECTS
SEATTLE WASHINGTON

GENERAL CONTRACTOR
TURNER

SUBMITTALS

| NO | REV | DATE | DESCRIPTION |
|---|---|---|---|
| 1 | -- | 1/12/12 | 1ST SUBMITTAL |
| 2 | 1 | 3/21/12 | 2ND SUBMITTAL |
| 3 | 2 | 6/5/12 | FIELD & FILE |

CONTENTS: ELEVATIONS
DWN: WP SCALE: 3/8"=1'-0"

SHEET NUMBER
328

© 2010 GARDNER METAL SYSTEMS, INC. All Rights Reserved

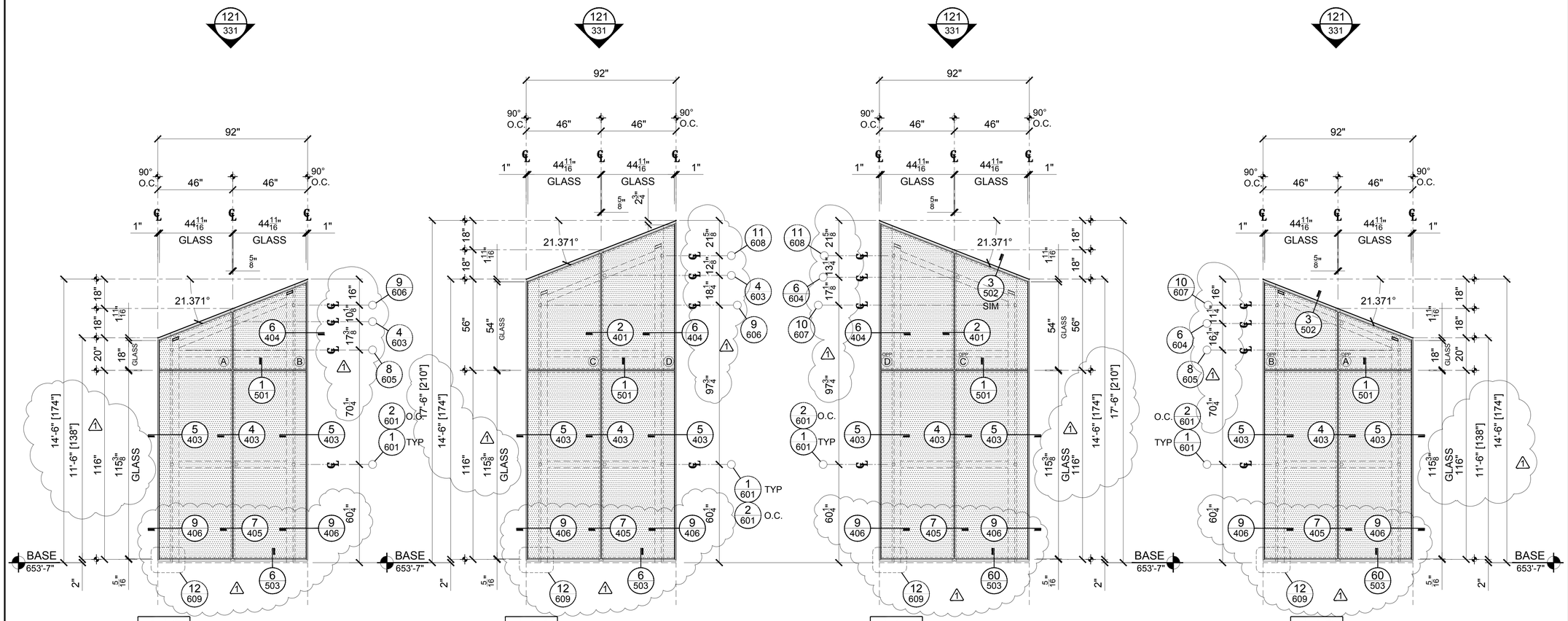


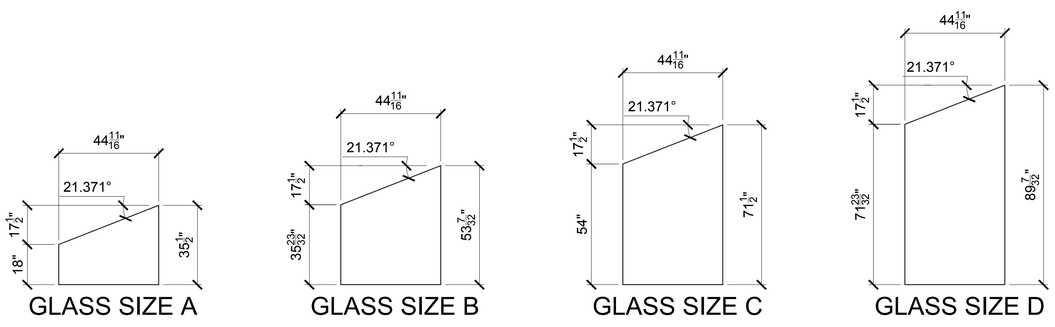


STACK 17S (SOUTH OF LAKESIDE)

SEE PLAN 34/220

GL-27 TYP. GLASS TYPE UNLESS NOTED OTHERWISE

GMS
WWW.GARDNERMETAL.COM

LEGENDS

PROJECT

# #337 CMMCC MECH. STACKS SHOP DRAWINGS

CUSTOMER
HARMON INC.
BOLINGBROOK IL

ARCHITECT
LMN ARCHITECTS
SEATTLE WASHINGTON

GENERAL CONTRACTOR
TURNER

SUBMITTALS

| NO | REV | DATE | DESCRIPTION |
|---|---|---|---|
| 1 | -- | 1/12/12 | 1ST SUBMITTAL |
| 2 | 1 | 3/21/12 | 2ND SUBMITTAL |
| 3 | 2 | 6/5/12 | FIELD & FILE |

CONTENTS: ELEVATIONS
DWN: WP SCALE: 3/8"=1'-0"

SHEET NUMBER
329

© 2010 GARDNER METAL SYSTEMS, INC. All Rights Reserved

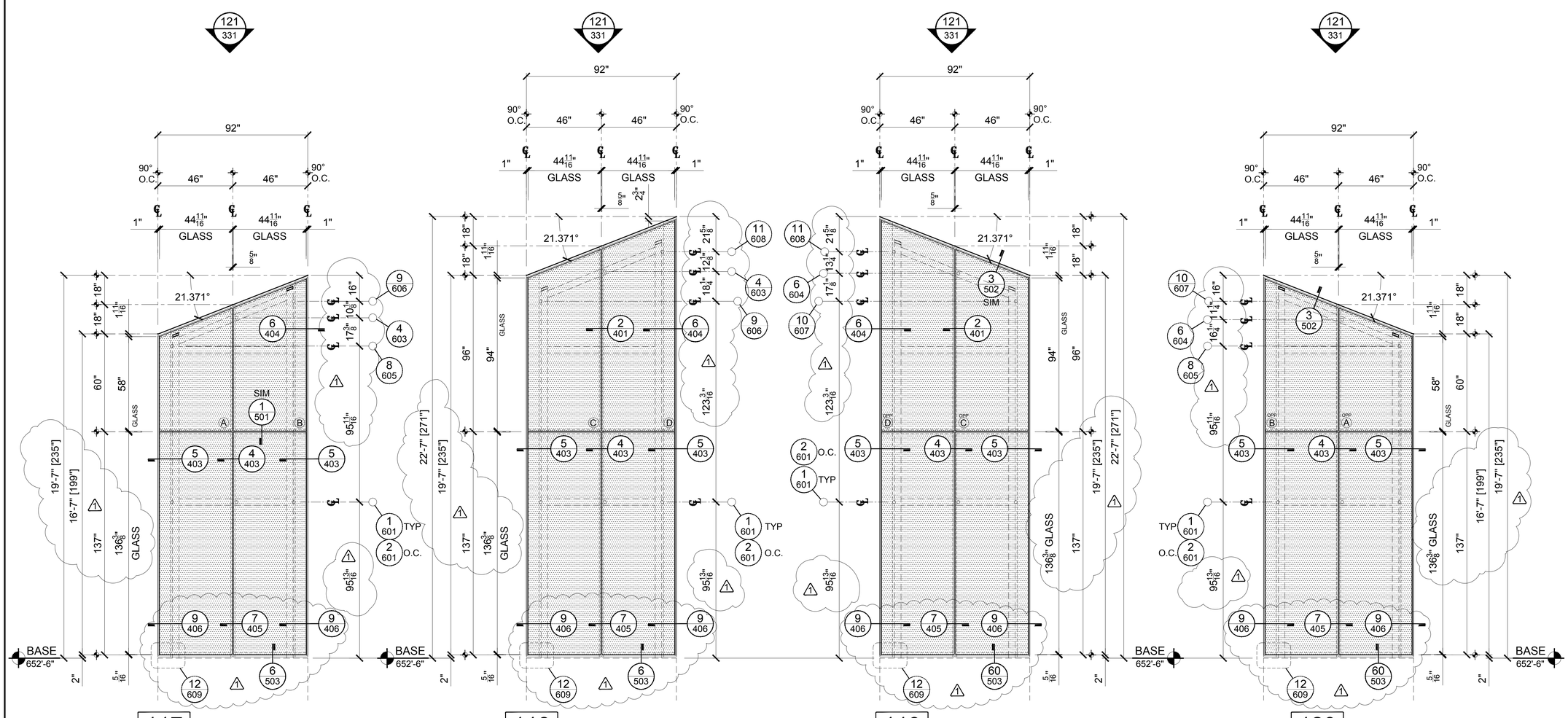


117 STACK 18S
REF NO.
REF SHT.
TOTAL QUANTITY THUS: 1

118 STACK 18S
REF NO.
REF SHT.
TOTAL QUANTITY THUS: 1

119 STACK 18S
REF NO.
REF SHT.
TOTAL QUANTITY THUS: 1

120 STACK 18S
REF NO.
REF SHT.
TOTAL QUANTITY THUS: 1

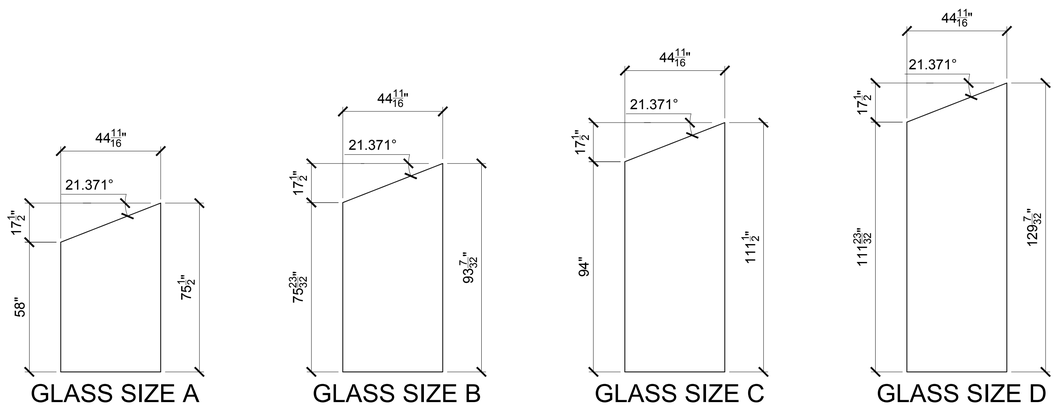


GLASS SIZE A

GLASS SIZE B

GLASS SIZE C

GLASS SIZE D

STACK 18S (SOUTH OF LAKESIDE)

SEE PLAN 35/220

GL-27 TYP. GLASS TYPE UNLESS NOTED OTHERWISE

GMS
WWW.GARDNERMETAL.COM

LEGENDS

PROJECT

# #337 CMMCC MECH. STACKS

SHOP DRAWINGS

CUSTOMER
HARMON INC.
BOLINGBROOK IL

ARCHITECT
LMN ARCHITECTS
SEATTLE WASHINGTON

GENERAL CONTRACTOR
TURNER

SUBMITTALS

| NO | REV | DATE | DESCRIPTION |
|---|---|---|---|
| 1 | -- | 1/12/12 | 1ST SUBMITTAL |
| 2 | 1 | 3/21/12 | 2ND SUBMITTAL |
| 3 | 2 | 6/5/12 | FIELD & FILE |

CONTENTS: ELEVATIONS
DWN: WP SCALE: 3/8"=1'-0"

SHEET NUMBER
330

© 2010 GARDNER METAL SYSTEMS, INC. All Rights Reserved

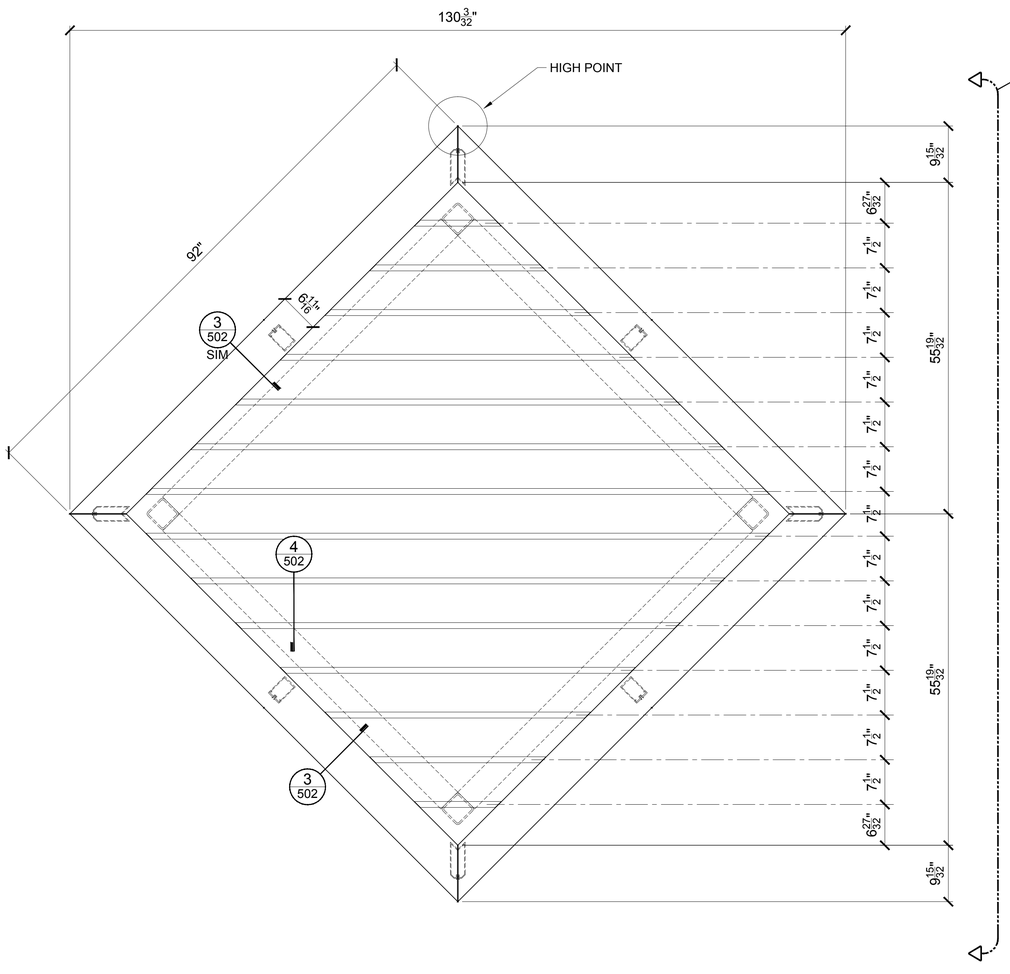


121
REF NO: 13
REF SHT: A570
STACK TUBE GRILL
TOTAL QUANTITY THUS: 30

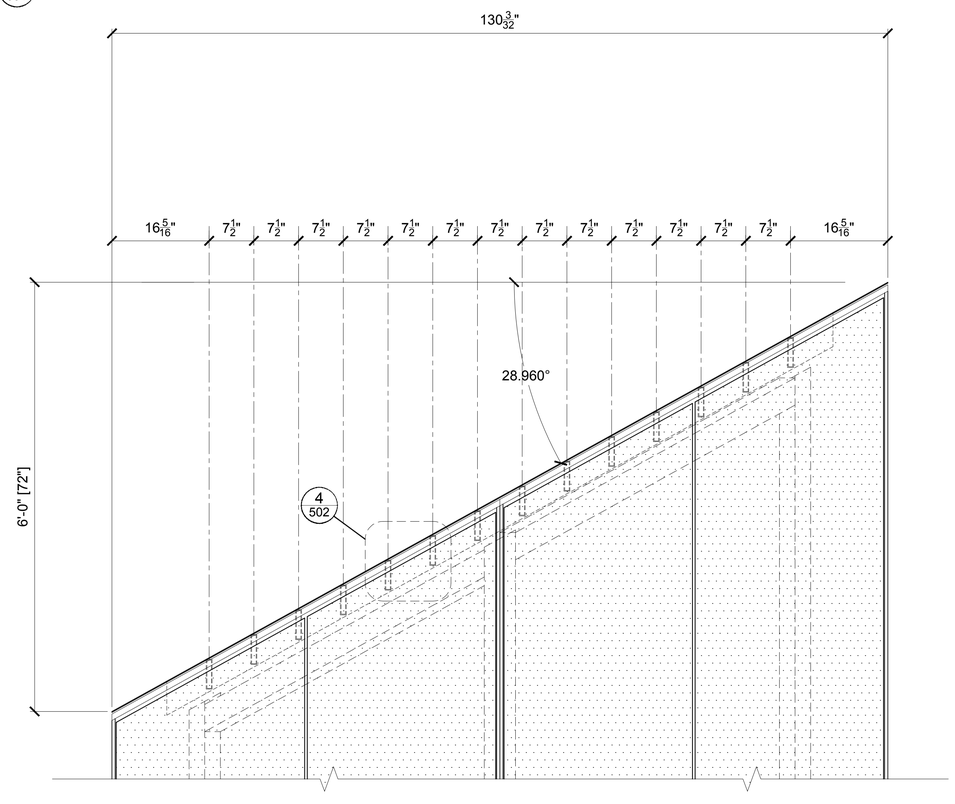


"A" TOP ELEVATION SIDE VIEW
ARCH. DETAIL REF:
ARCH. SHEET REF:

GMS
WWW.GARDNERMETAL.COM

LEGENDS

PROJECT
#337
CMMCC
MECH. STACKS
SHOP DRAWINGS

CUSTOMER
HARMON INC.
BOLINGBROOK IL

ARCHITECT
LMN ARCHITECTS
SEATTLE WASHINGTON

GENERAL CONTRACTOR
TURNER

SUBMITTALS

| NO | REV | DATE | DESCRIPTION |
|---|---|---|---|
| 1 | -- | 1/12/12 | 1ST SUBMITTAL |
| 2 | 1 | 3/21/12 | 2ND SUBMITTAL |
| 3 | 2 | 6/5/12 | FIELD & FILE |

CONTENTS: ELEVATIONS
DWN: WP SCALE: 1" = 1'-0"

SHEET NUMBER
331

© 2010 GARDNER METAL SYSTEMS, INC. All Rights Reserved

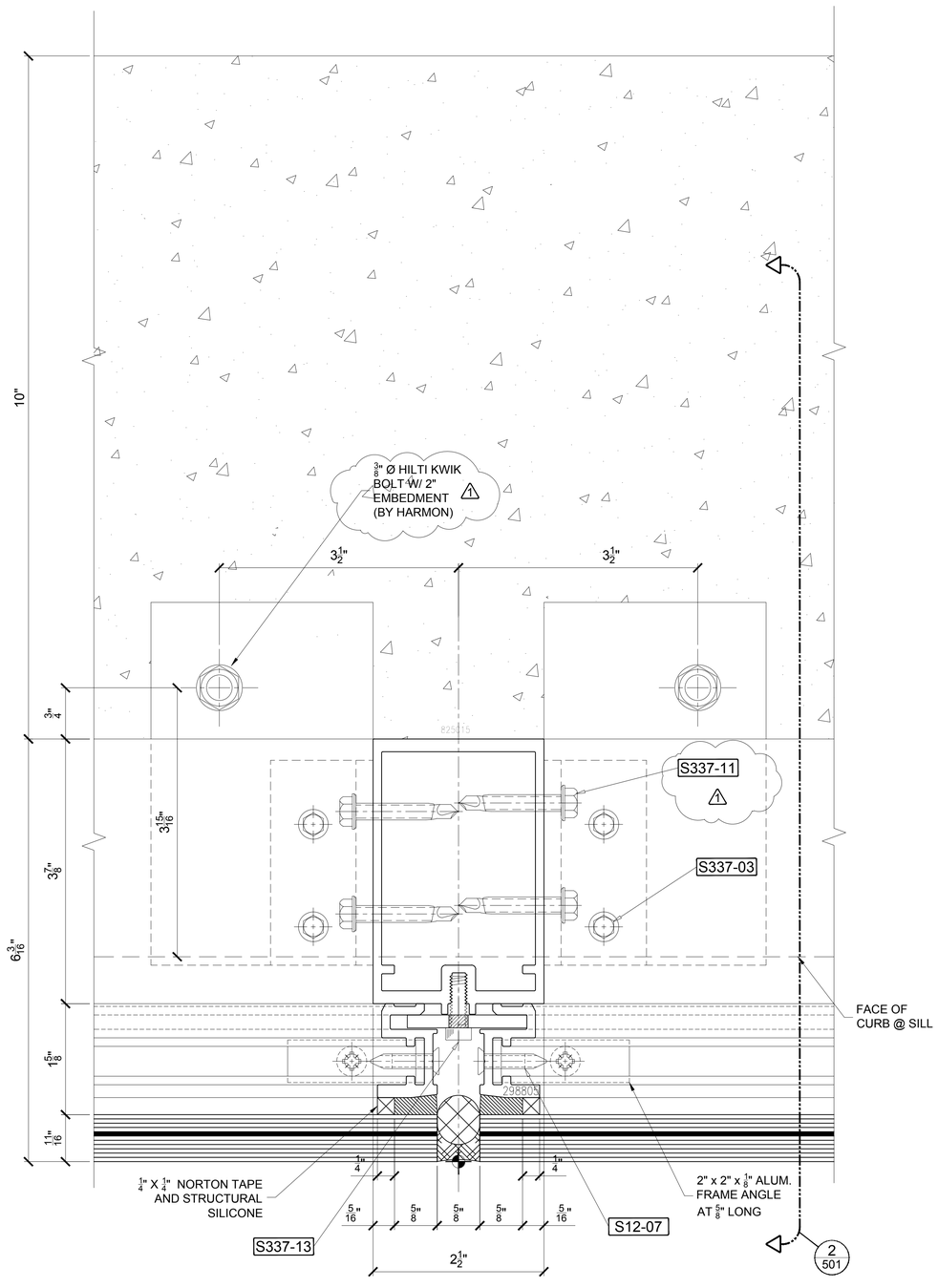


1 TYP. VERTICAL
ARCH. DETAIL REF:
ARCH. SHEET REF:

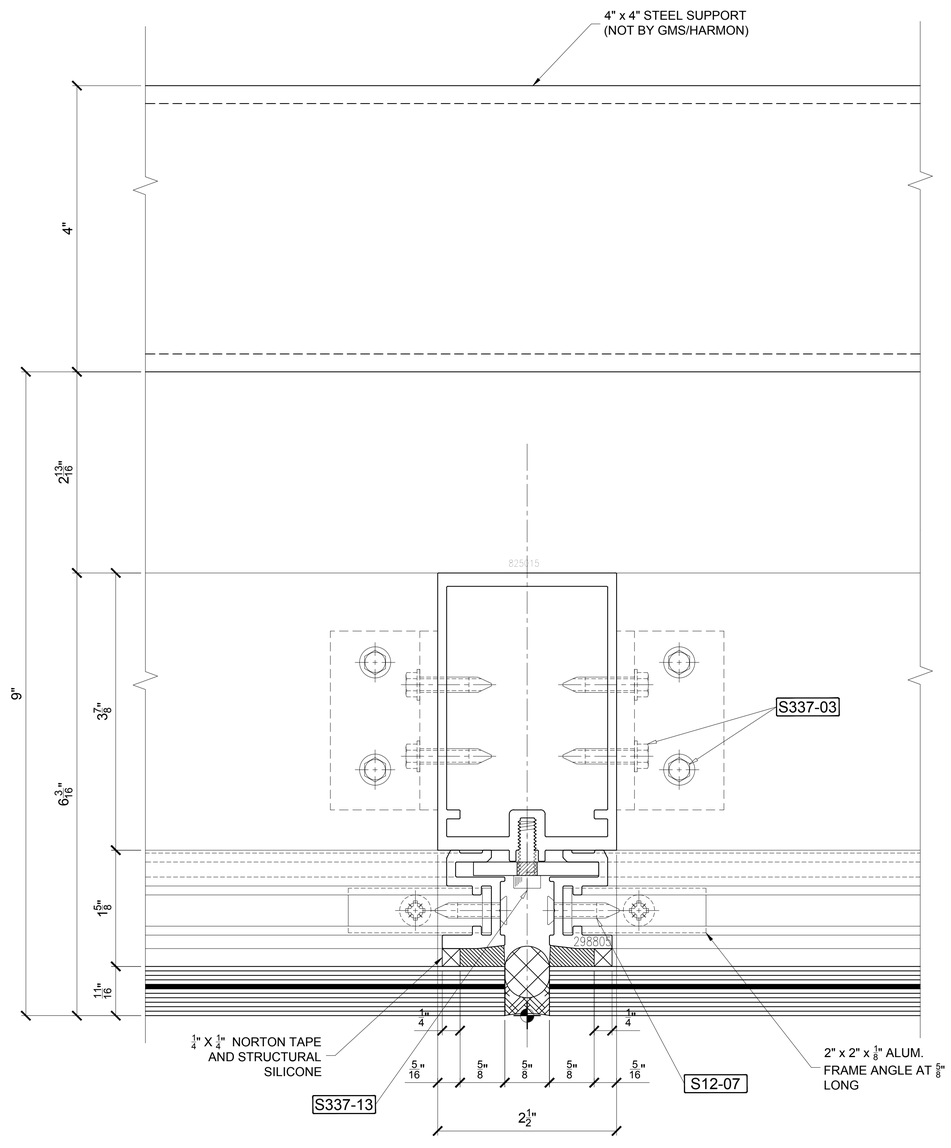


2 TYP. VERTICAL
ARCH. DETAIL REF:
ARCH. SHEET REF:

GMS
WWW.GARDNERMETAL.COM

LEGENDS

PROJECT

# #337 CMMCC MECH. STACKS

SHOP DRAWINGS

CUSTOMER
HARMON INC.
BOLINGBROOK IL

ARCHITECT
LMN ARCHITECTS
SEATTLE WASHINGTON

GENERAL CONTRACTOR
TURNER

SUBMITTALS

| NO | REV | DATE | DESCRIPTION |
|---|---|---|---|
| 1 | -- | 1/12/12 | 1ST SUBMITTAL |
| 2 | 1 | 3/21/12 | 2ND SUBMITTAL |
| 3 | 2 | 6/5/12 | FIELD & FILE |

CONTENTS: VERTICAL DETAILS
DWN: WP SCALE: FULL SIZE

SHEET NUMBER
401

© 2010 GARDNER METAL SYSTEMS, INC. All Rights Reserved

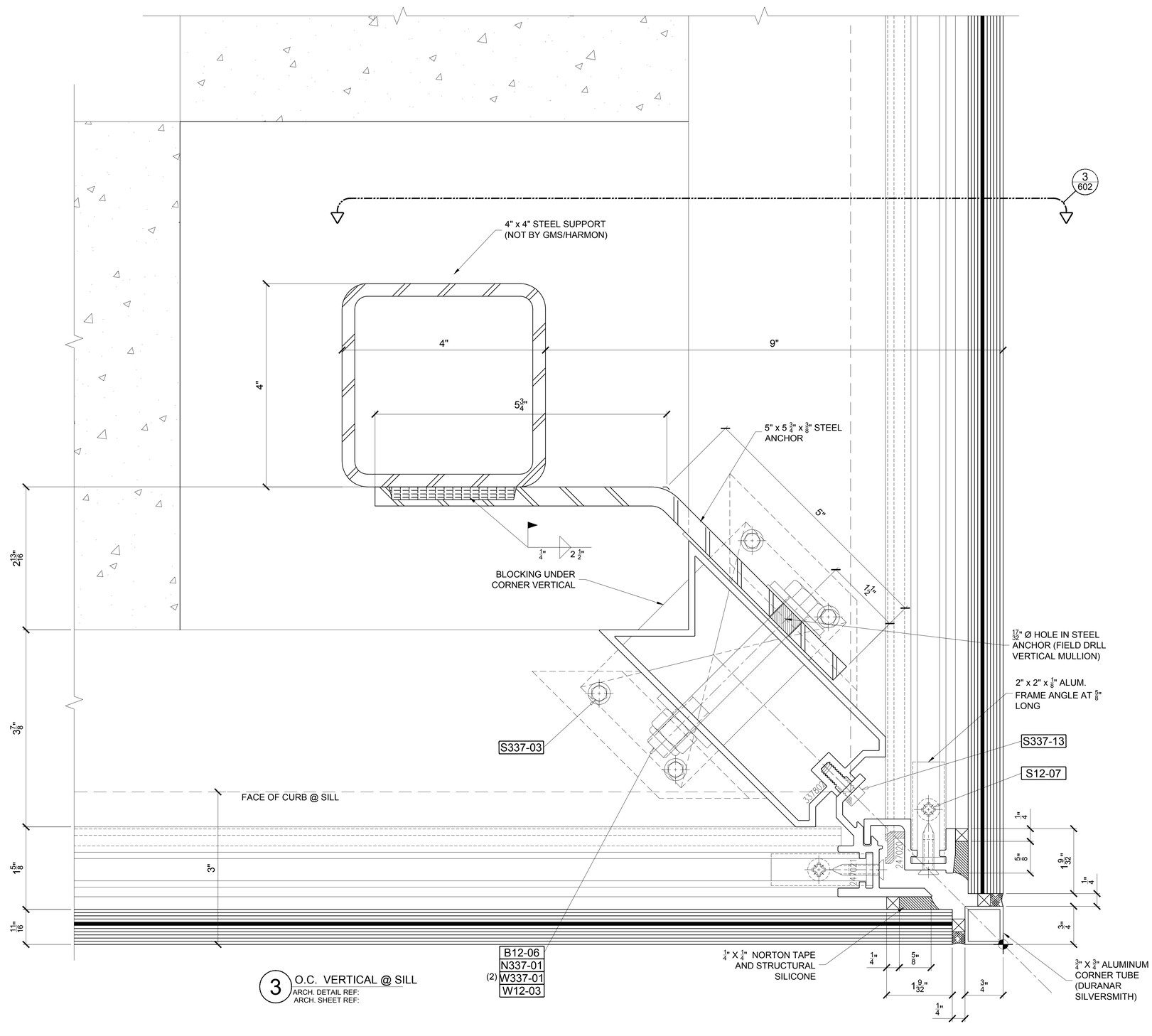


WWW.GARDNERMETAL.COM

LEGENDS

PROJECT

# #337 CMMCC MECH. STACKS

SHOP DRAWINGS

CUSTOMER

HARMON INC.
BOLINGBROOK IL

ARCHITECT

LMN ARCHITECTS
SEATTLE WASHINGTON

GENERAL CONTRACTOR

TURNER

SUBMITTALS

| NO | REV | DATE | DESCRIPTION |
|---|---|---|---|
| 1 | -- | 1/12/12 | 1ST SUBMITTAL |
| 2 | 1 | 3/21/12 | 2ND SUBMITTAL |
| 3 | 2 | 6/5/12 | FIELD & FILE |

CONTENTS: VERTICAL DETAILS
DWN: WP SCALE: FULL SIZE

SHEET NUMBER

402

© 2010 GARDNER METAL SYSTEMS, INC. All Rights Reserved

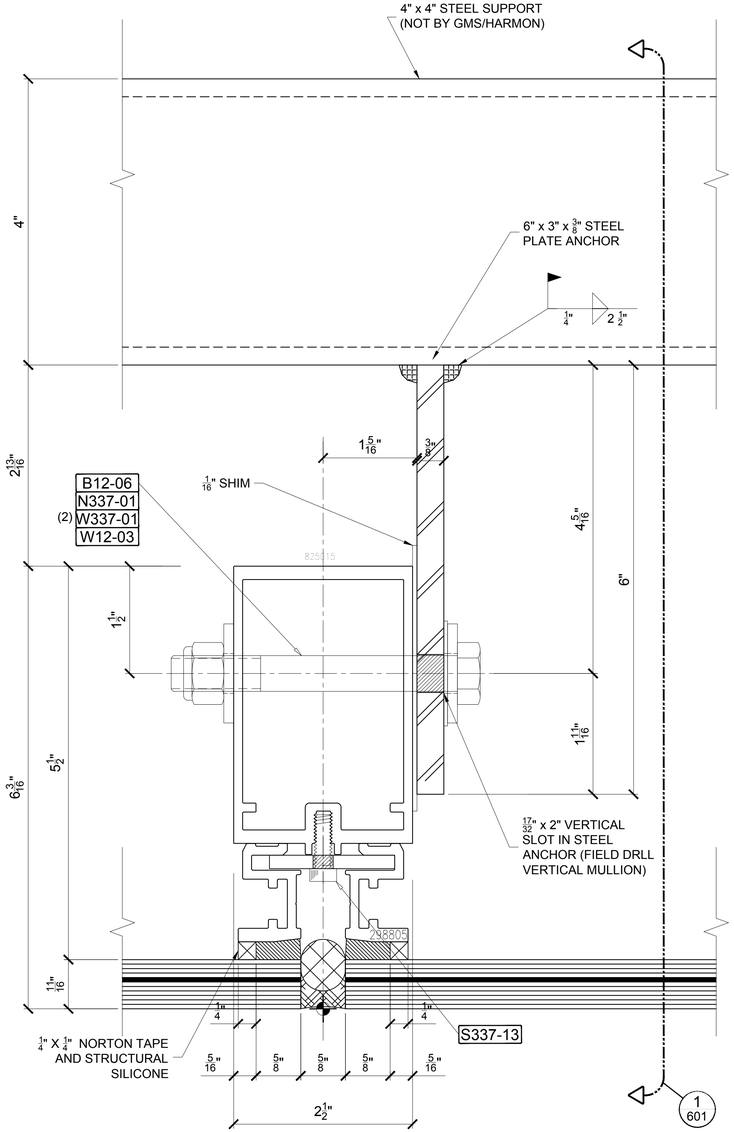


4 TYP. VERTICAL
ARCH. DETAIL REF:
ARCH. SHEET REF:

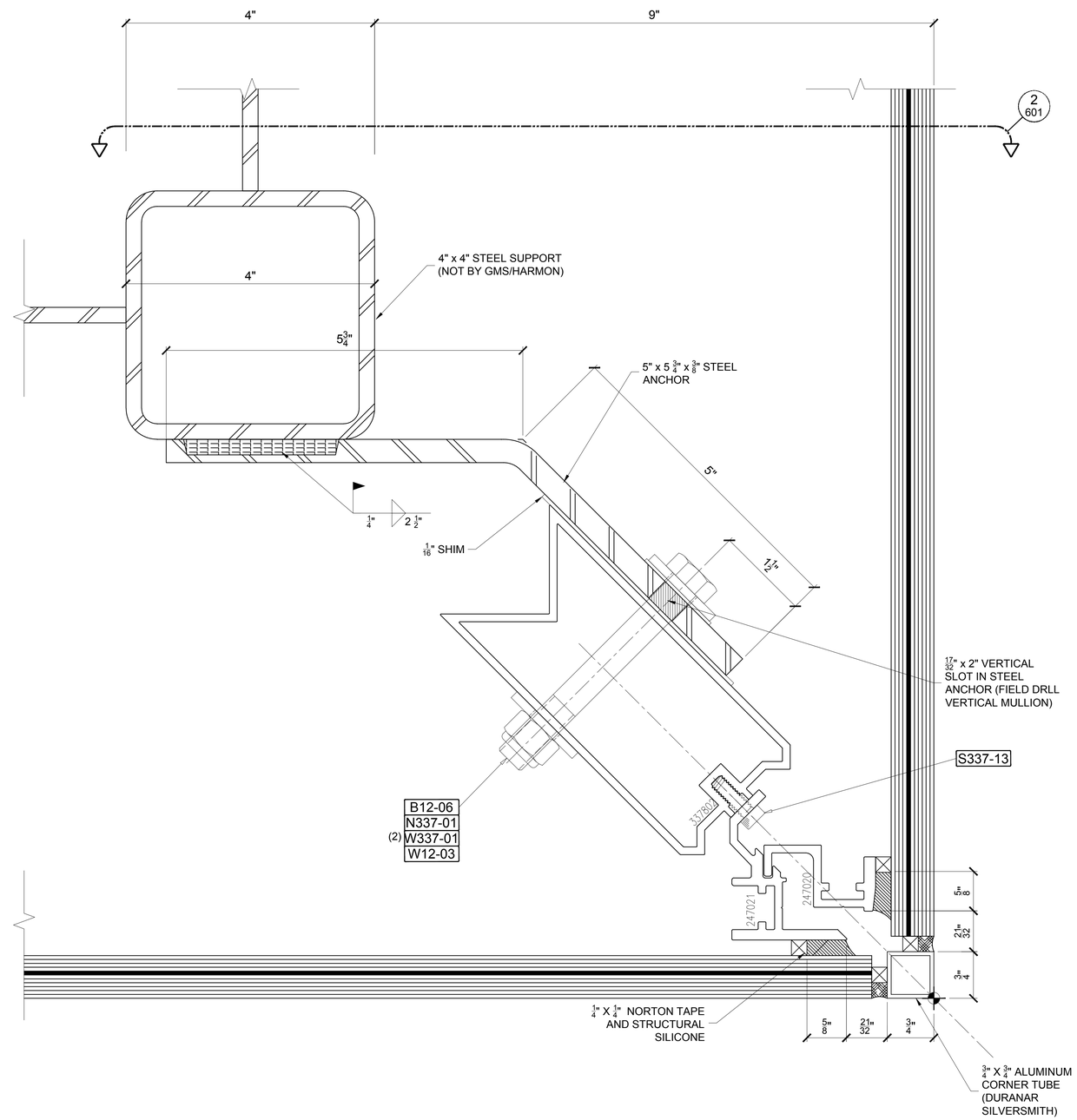


5 O.C. VERTICAL @
ARCH. DETAIL REF:
ARCH. SHEET REF:

GMS
WWW.GARDNERMETAL.COM

LEGENDS

PROJECT

# #337 CMMCC MECH. STACKS SHOP DRAWINGS

CUSTOMER
HARMON INC.
BOLINGBROOK IL

ARCHITECT
LMN ARCHITECTS
SEATTLE WASHINGTON

GENERAL CONTRACTOR
TURNER

SUBMITTALS

| NO | REV | DATE | DESCRIPTION |
|---|---|---|---|
| 1 | -- | 1/12/12 | 1ST SUBMITTAL |
| 2 | 1 | 3/21/12 | 2ND SUBMITTAL |
| 3 | 2 | 6/5/12 | FIELD & FILE |

CONTENTS: VERTICAL DETAILS
DWN: WP SCALE: FULL SIZE

SHEET NUMBER
403

© 2010 GARDNER METAL SYSTEMS, INC. All Rights Reserved

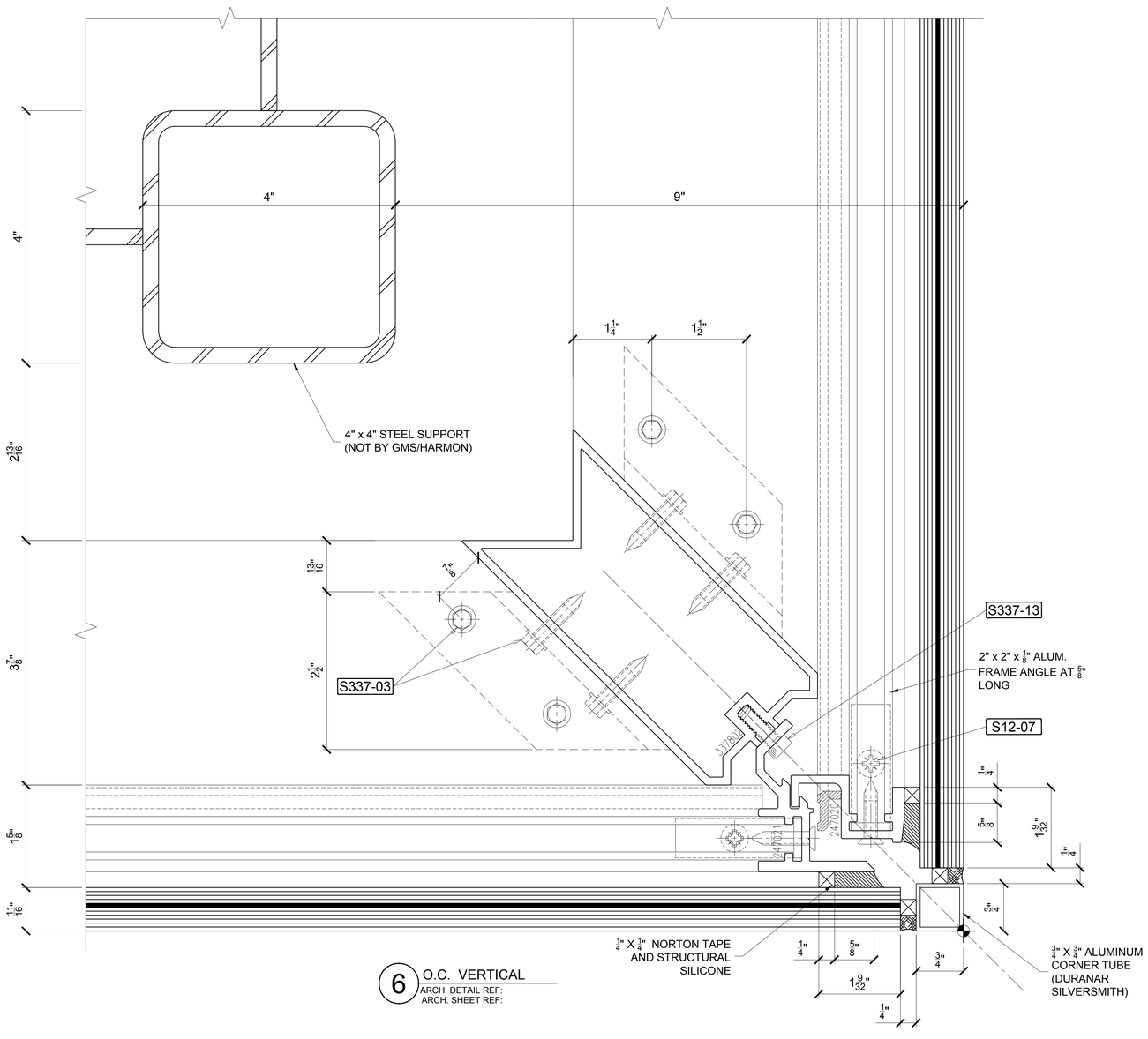


6 O.C. VERTICAL
ARCH. DETAIL REF:
ARCH. SHEET REF:

GMS
WWW.GARDNERMETAL.COM

LEGENDS

PROJECT

# #337 CMMCC MECH. STACKS

SHOP DRAWINGS

CUSTOMER
HARMON INC.
BOLINGBROOK IL

ARCHITECT
LMN ARCHITECTS
SEATTLE WASHINGTON

GENERAL CONTRACTOR
TURNER

SUBMITTALS

| NO | REV | DATE | DESCRIPTION |
|---|---|---|---|
| 1 | -- | 1/12/12 | 1ST SUBMITTAL |
| 2 | 1 | 3/21/12 | 2ND SUBMITTAL |
| 3 | 2 | 6/5/12 | FIELD & FILE |

CONTENTS: VERTICAL DETAILS
DWN: WP SCALE: FULL SIZE

SHEET NUMBER
404

© 2010 GARDNER METAL SYSTEMS, INC. All Rights Reserved

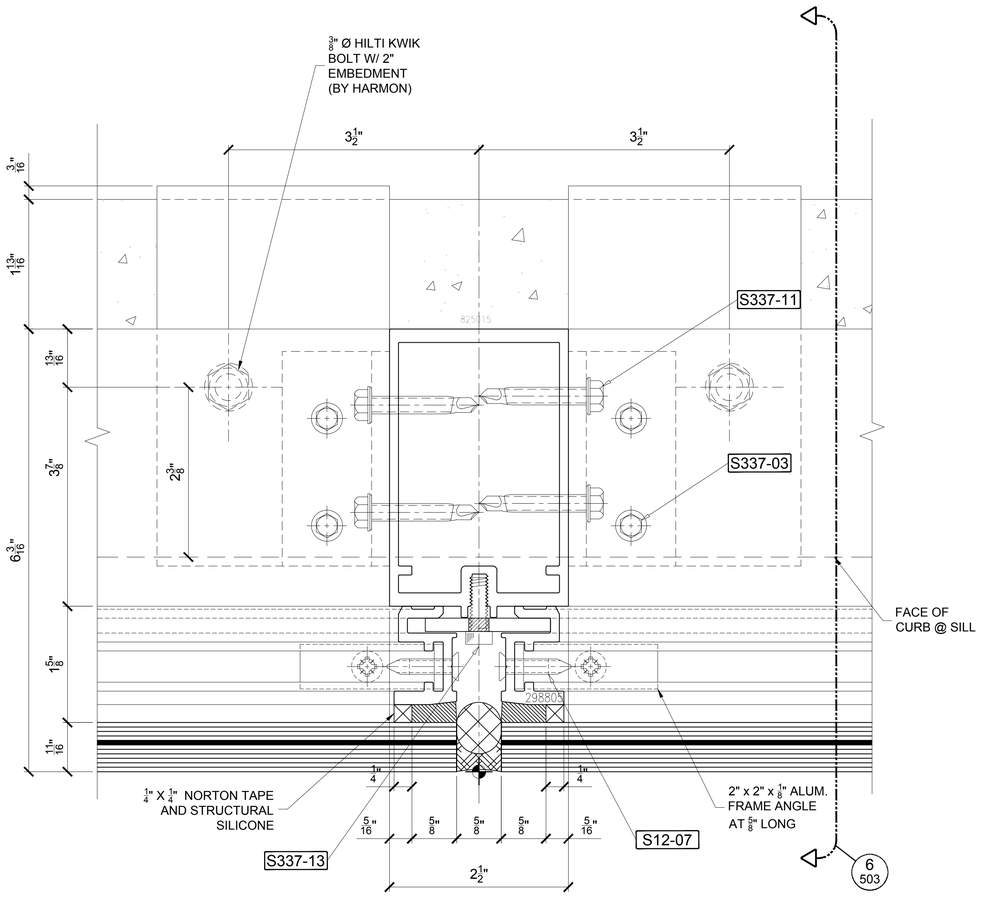


7 TYP. VERTICAL
ARCH. DETAIL REF:
ARCH. SHEET REF:

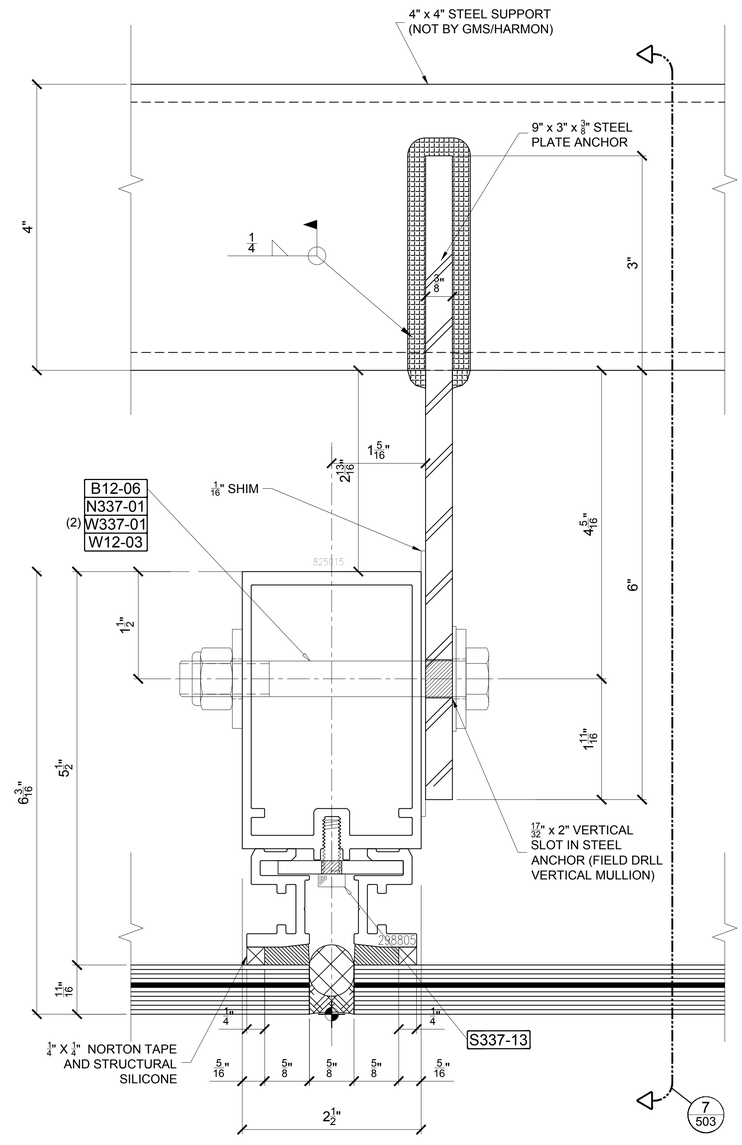


8 TYP. VERTICAL
ARCH. DETAIL REF:
ARCH. SHEET REF:

GMS
WWW.GARDNERMETAL.COM

LEGENDS

PROJECT

# #337 CMMCC MECH. STACKS

SHOP DRAWINGS

CUSTOMER
HARMON INC.
BOLINGBROOK IL

ARCHITECT
LMN ARCHITECTS
SEATTLE WASHINGTON

GENERAL CONTRACTOR
TURNER

SUBMITTALS

| NO | REV | DATE | DESCRIPTION |
|---|---|---|---|
| 1 | -- | 1/12/12 | 1ST SUBMITTAL |
| 2 | 1 | 3/21/12 | 2ND SUBMITTAL |
| 3 | 2 | 6/5/12 | FIELD & FILE |

CONTENTS: VERTICAL DETAILS
DWN: JNM SCALE: FULL SIZE
SHEET NUMBER
1 405

© 2010 GARDNER METAL SYSTEMS, INC. All Rights Reserved

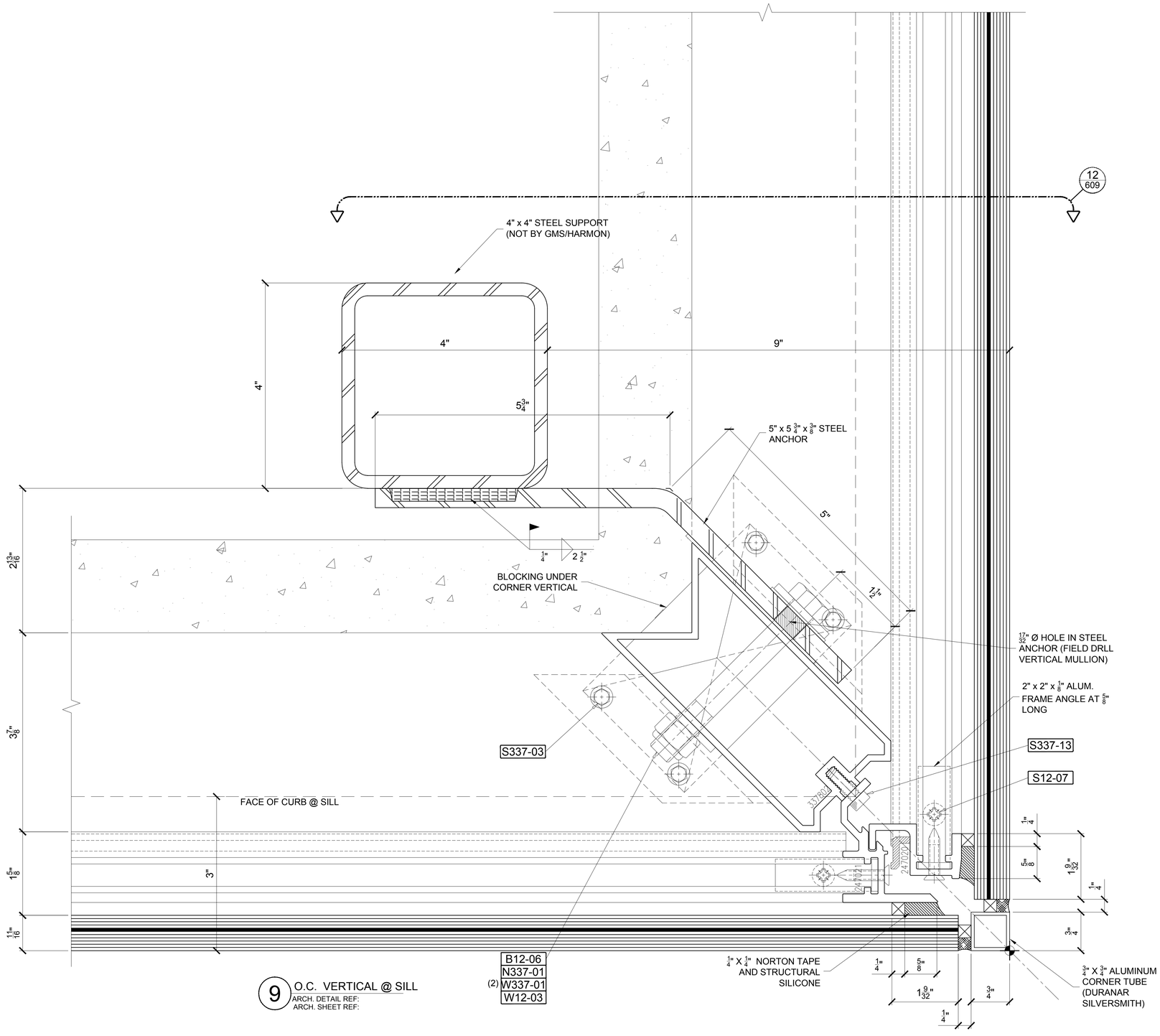


GMS
WWW.GARDNERMETAL.COM

LEGENDS

PROJECT

# #337 CMMCC MECH. STACKS

SHOP DRAWINGS

CUSTOMER
HARMON INC.
BOLINGBROOK IL

ARCHITECT
LMN ARCHITECTS
SEATTLE WASHINGTON

GENERAL CONTRACTOR
TURNER

SUBMITTALS

| NO | REV | DATE | DESCRIPTION |
|---|---|---|---|
| 1 | -- | 1/12/12 | 1ST SUBMITTAL |
| 2 | 1 | 3/21/12 | 2ND SUBMITTAL |
| 3 | 2 | 6/5/12 | FIELD & FILE |

CONTENTS: VERTICAL DETAILS
DWN: JNM SCALE: FULL SIZE
SHEET NUMBER
406

© 2010 GARDNER METAL SYSTEMS, INC. All Rights Reserved

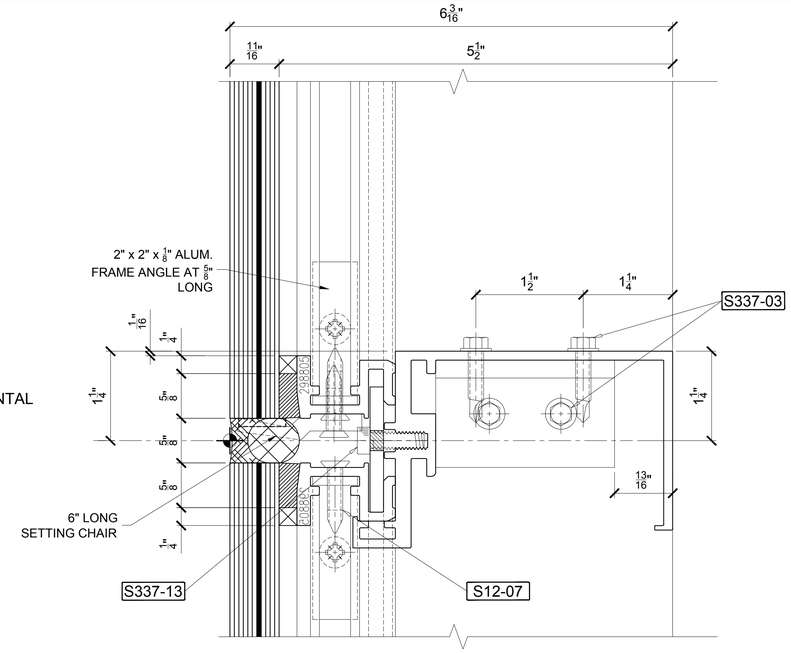


1 INTERMED. HORIZONTAL
ARCH. DETAIL REF:
ARCH. SHEET REF:

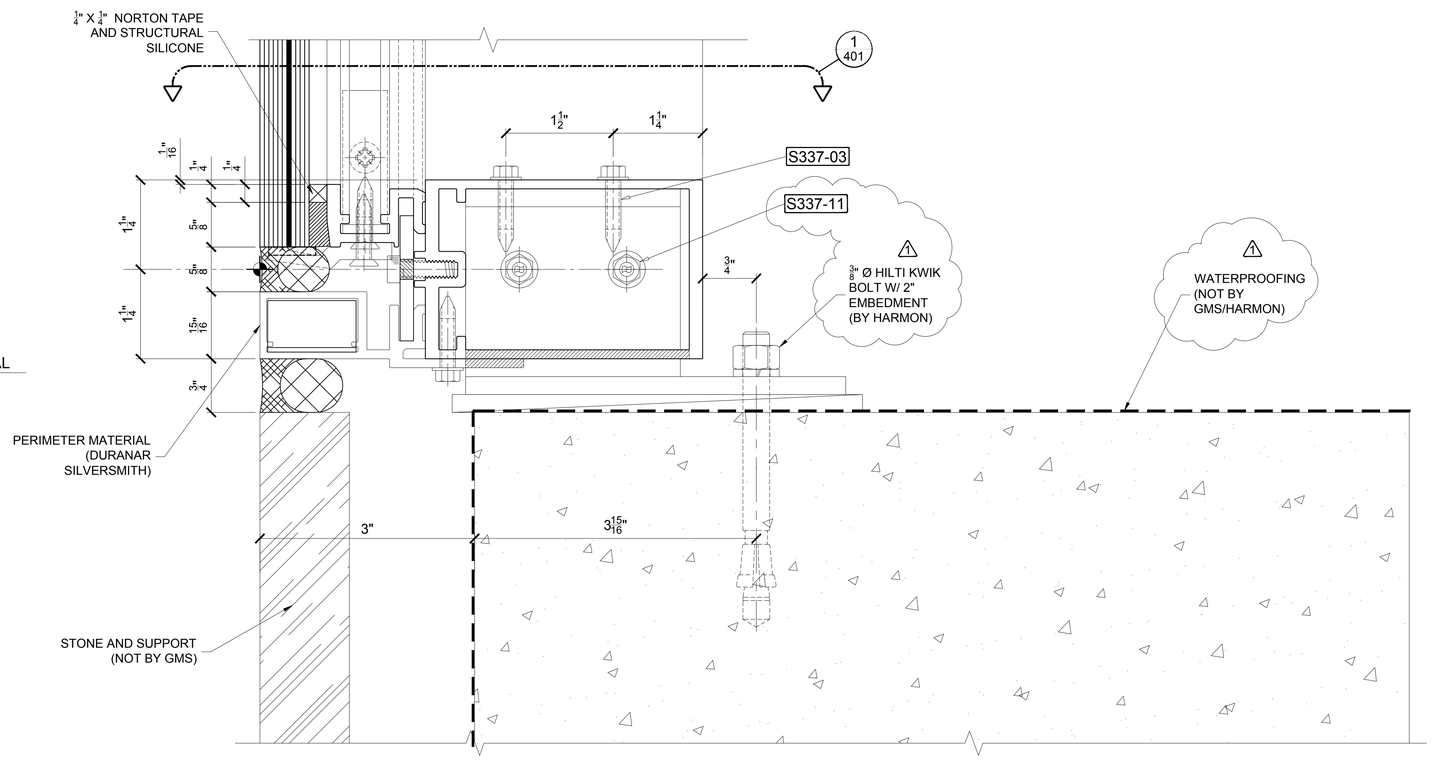


2 SILL HORIZONTAL
ARCH. DETAIL REF:
ARCH. SHEET REF:

GMS
WWW.GARDNERMETAL.COM

LEGENDS

PROJECT

#337
CMMCC
MECH. STACKS
SHOP DRAWINGS

CUSTOMER
HARMON INC.
BOLINGBROOK IL

ARCHITECT
LMN ARCHITECTS
SEATTLE WASHINGTON

GENERAL CONTRACTOR
TURNER

SUBMITTALS

| NO | REV | DATE | DESCRIPTION |
|---|---|---|---|
| 1 | -- | 1/12/12 | 1ST SUBMITTAL |
| 2 | 1 | 3/21/12 | 2ND SUBMITTAL |
| 3 | 2 | 6/5/12 | FIELD & FILE |

CONTENTS: HORIZONTAL DETAILS
DWN: WP SCALE: FULL SIZE

SHEET NUMBER
501

© 2010 GARDNER METAL SYSTEMS, INC. All Rights Reserved

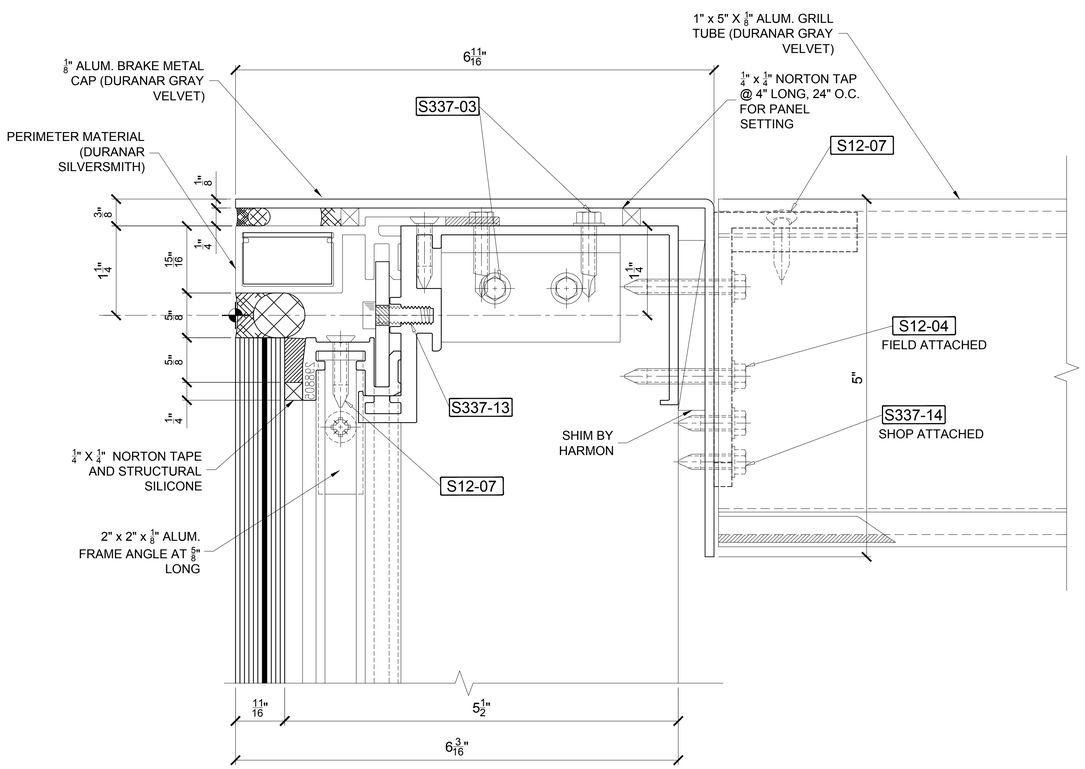


3 HEAD HORIZONTAL
ARCH. DETAIL REF:
ARCH. SHEET REF:

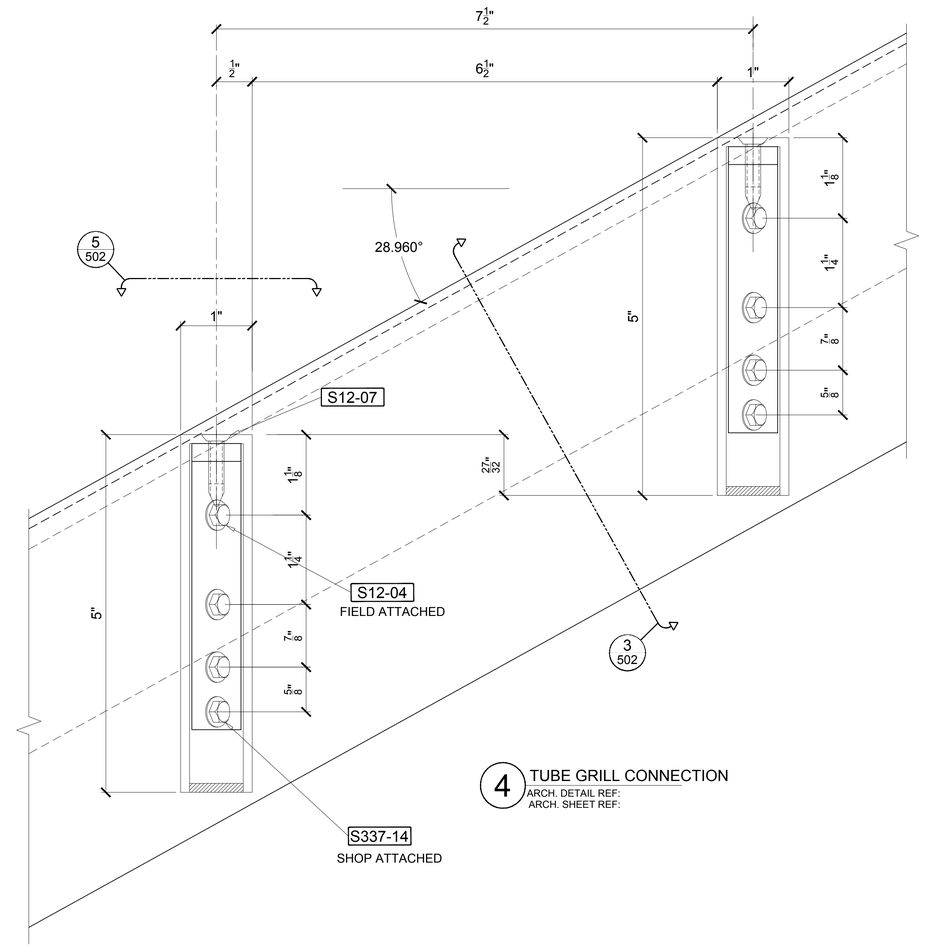


4 TUBE GRILL CONNECTION
ARCH. DETAIL REF:
ARCH. SHEET REF:

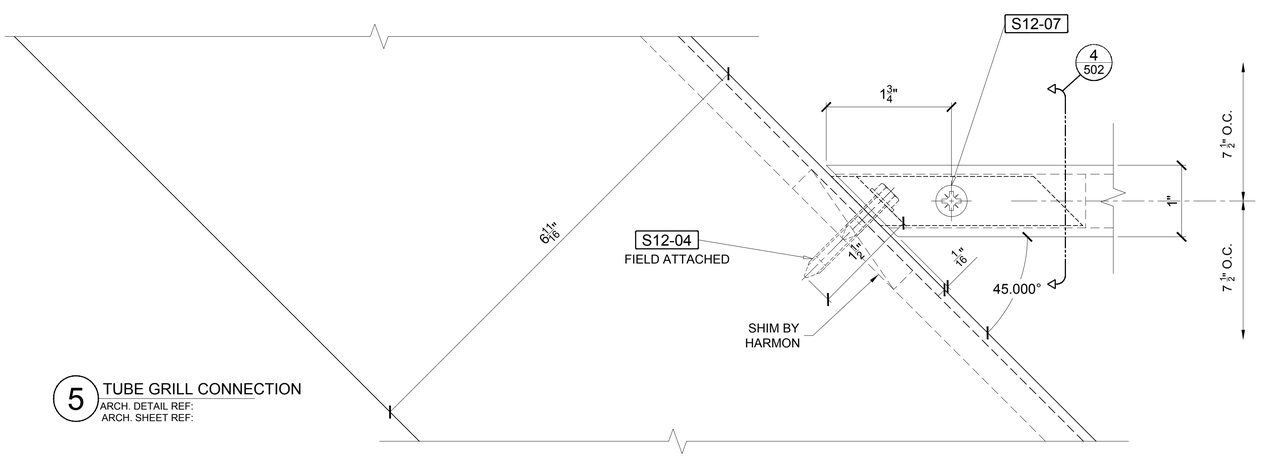


5 TUBE GRILL CONNECTION
ARCH. DETAIL REF:
ARCH. SHEET REF:

GMS
WWW.GARDNERMETAL.COM

LEGENDS

PROJECT

# #337 CMMCC MECH. STACKS

SHOP DRAWINGS

CUSTOMER
HARMON INC.
BOLINGBROOK IL

ARCHITECT
LMN ARCHITECTS
SEATTLE WASHINGTON

GENERAL CONTRACTOR
TURNER

SUBMITTALS

| NO | REV | DATE | DESCRIPTION |
|---|---|---|---|
| 1 | -- | 1/12/12 | 1ST SUBMITTAL |
| 2 | 1 | 3/21/12 | 2ND SUBMITTAL |
| 3 | 2 | 6/5/12 | FIELD & FILE |

CONTENTS: HORIZONTAL DETAILS
DWN: WP SCALE: FULL SIZE

SHEET NUMBER
502

© 2010 GARDNER METAL SYSTEMS, INC. All Rights Reserved

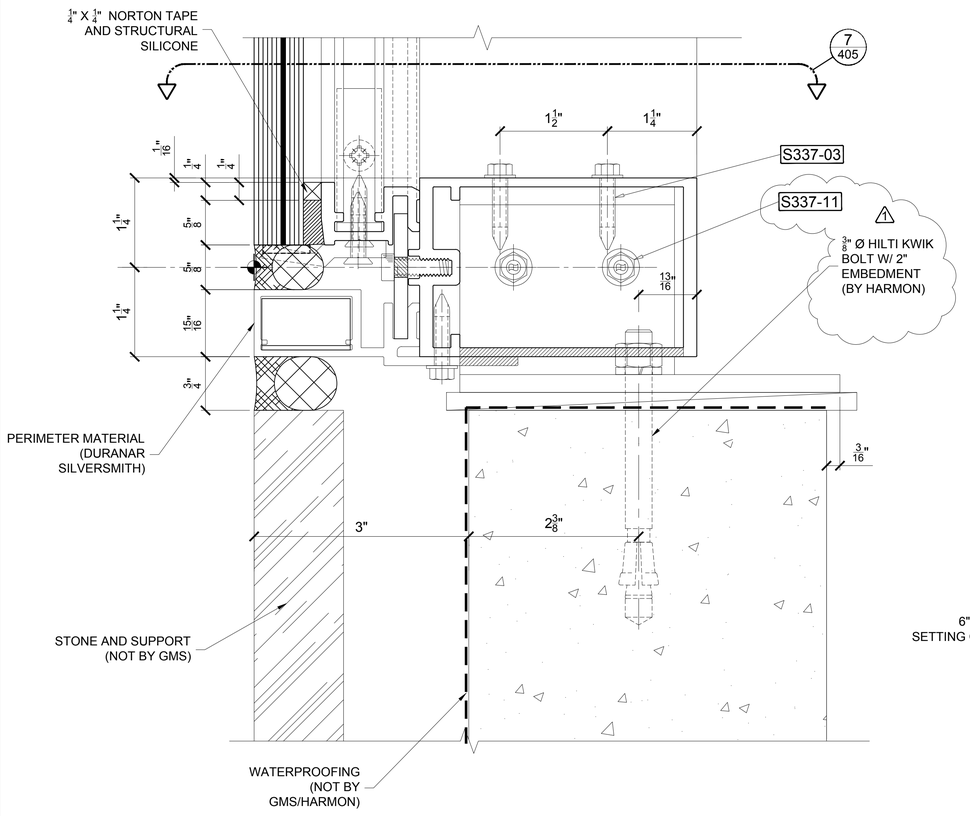


6 SILL HORIZONTAL
ARCH. DETAIL REF:
ARCH. SHEET REF:

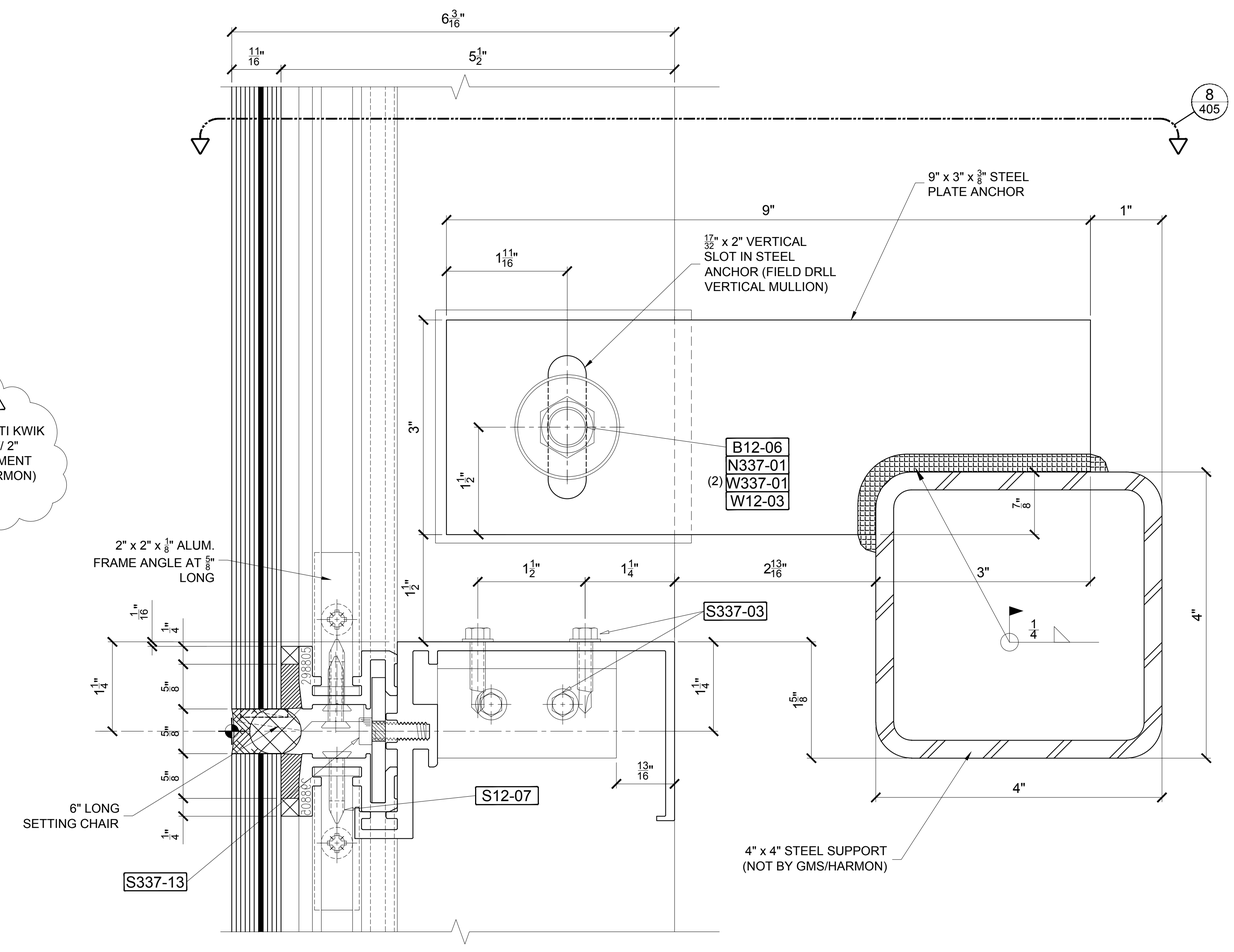


7 INTERMED.HORIZONTAL
ARCH. DETAIL REF:
ARCH. SHEET REF:

GMS
WWW.GARDNERMETAL.COM

LEGENDS

PROJECT
#337
CMMCC
MECH. STACKS
SHOP DRAWINGS

CUSTOMER
HARMON INC.
BOLINGBROOK IL

ARCHITECT
LMN ARCHITECTS
SEATTLE WASHINGTON

GENERAL CONTRACTOR
TURNER

SUBMITTALS

| NO | REV | DATE | DESCRIPTION |
|---|---|---|---|
| 1 | -- | 1/12/12 | 1ST SUBMITTAL |
| 2 | 1 | 3/21/12 | 2ND SUBMITTAL |
| 3 | 2 | 6/5/12 | FIELD & FILE |

CONTENTS: HORIZONTAL DETAILS
DWN: JNM SCALE: FULL SIZE
SHEET NUMBER
1 503

© 2010 GARDNER METAL SYSTEMS, INC. All Rights Reserved

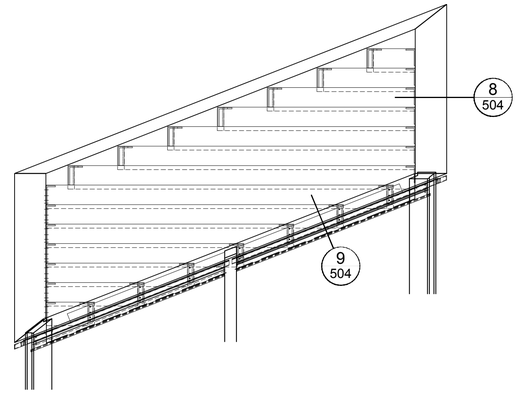


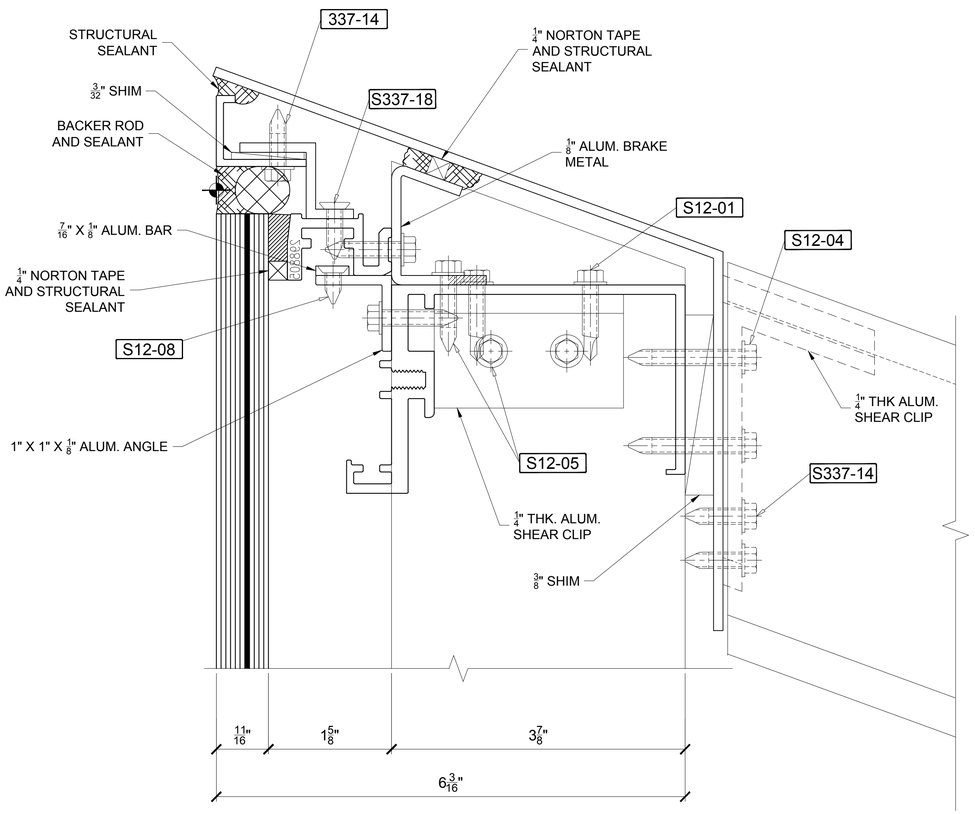


8 HEAD HORIZONTAL
ARCH. DETAIL REF:
ARCH. SHEET REF:

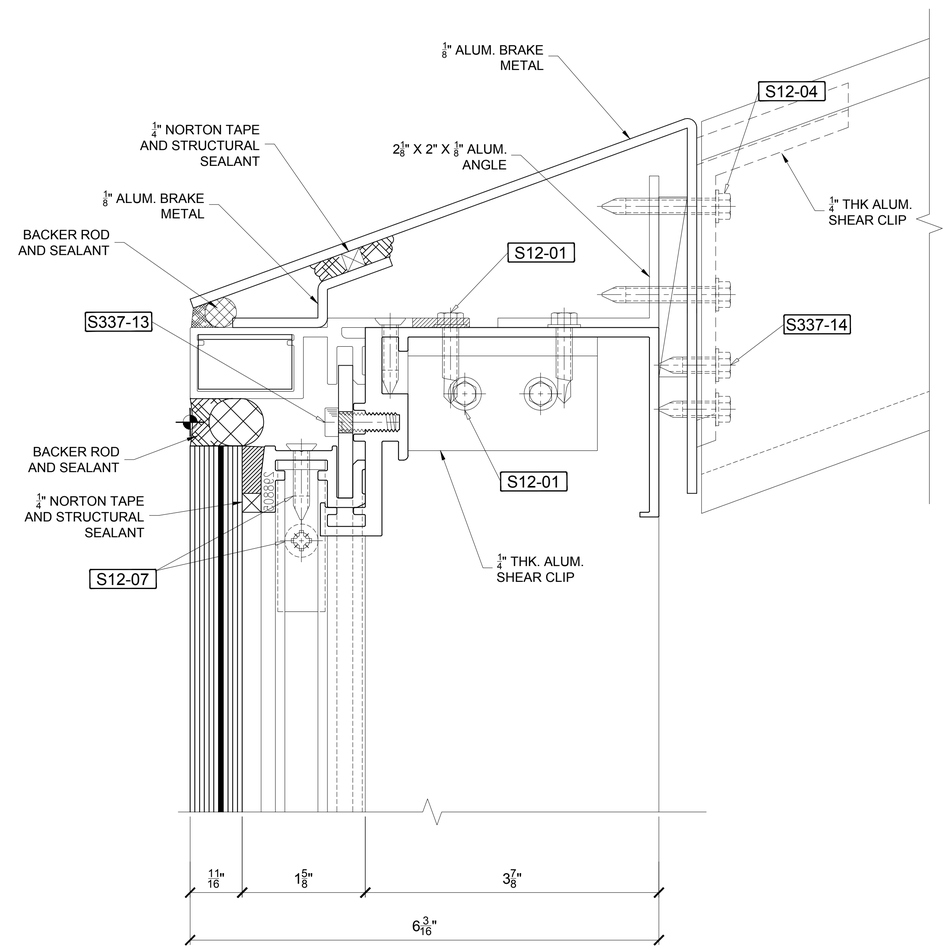


9 HEAD HORIZONTAL
ARCH. DETAIL REF:
ARCH. SHEET REF:

GMS
WWW.GARDNERMETAL.COM

LEGENDS

PROJECT

# #337 CMMCC MECH. STACKS

SHOP DRAWINGS

CUSTOMER
HARMON INC.
BOLINGBROOK IL

ARCHITECT
LMN ARCHITECTS
SEATTLE WASHINGTON

GENERAL CONTRACTOR
TURNER

SUBMITTALS

| NO | REV | DATE | DESCRIPTION |
|---|---|---|---|
| 1 | -- | 1/12/12 | 1ST SUBMITTAL |
| 2 | 1 | 3/21/12 | 2ND SUBMITTAL |
| 3 | 2 | 6/5/12 | FIELD & FILE |

CONTENTS: HORIZONTAL DETAILS
DWN: JNM SCALE: FULL SIZE
SHEET NUMBER
3 504

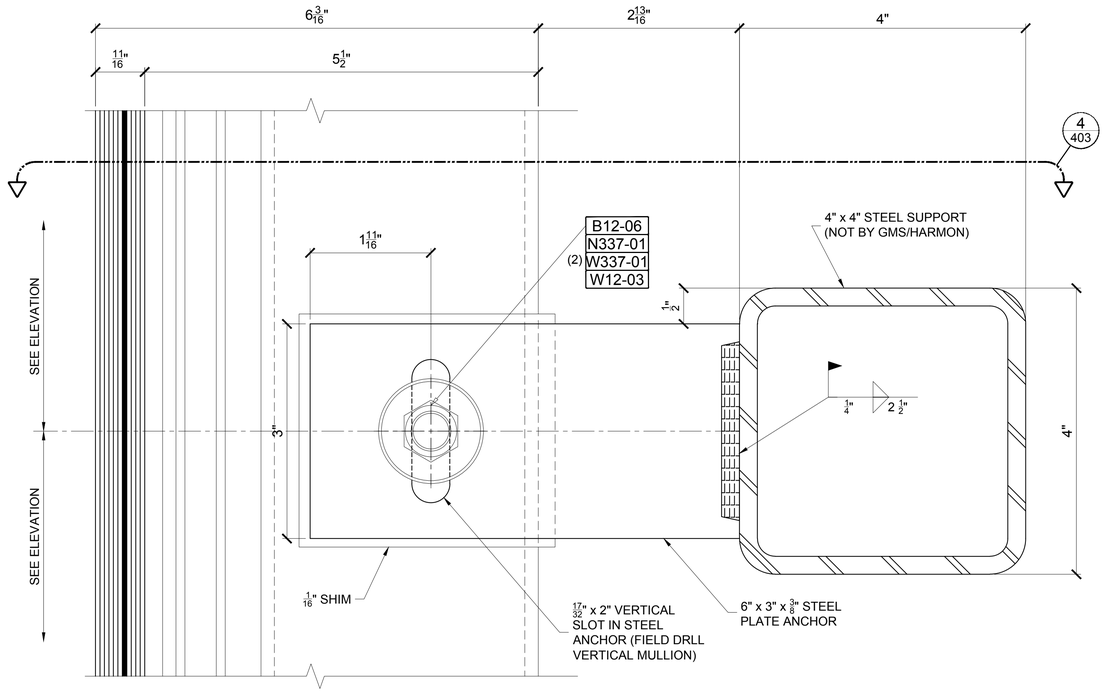


1 WINDLOAD ANCHOR
ARCH. DETAIL REF:
ARCH. SHEET REF:

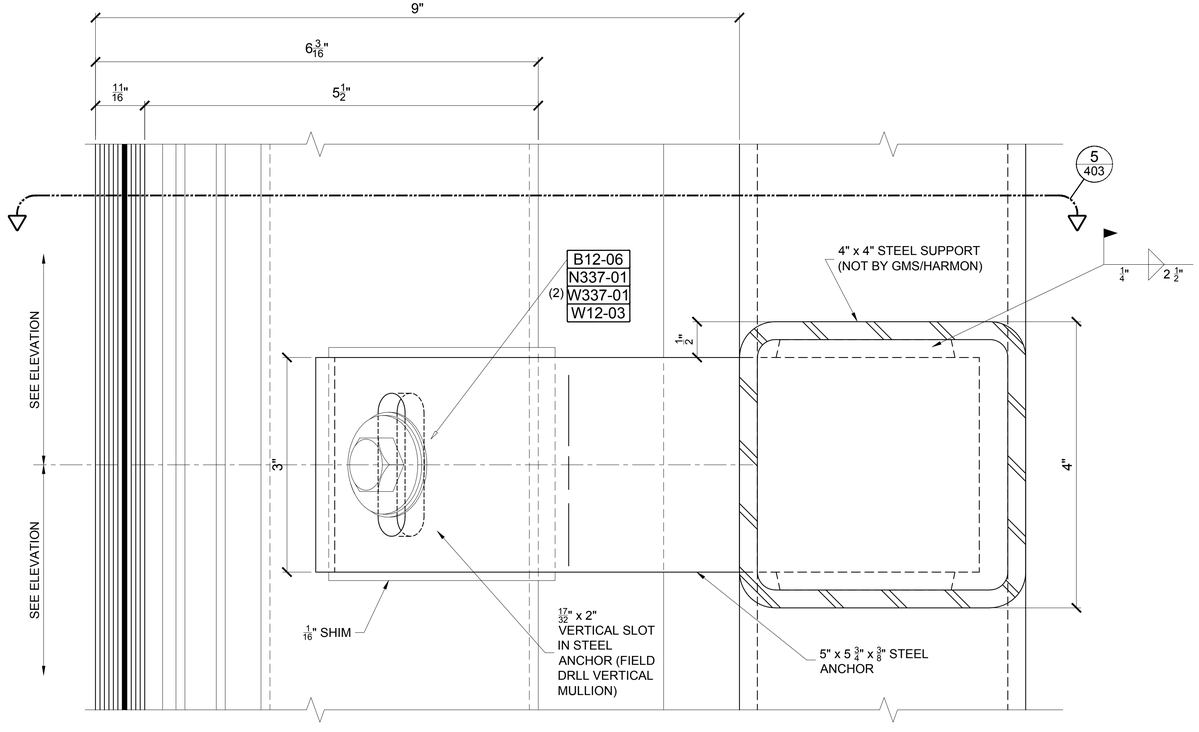


2 WINDLOAD ANCHOR
ARCH. DETAIL REF:
ARCH. SHEET REF:

GMS
WWW.GARDNERMETAL.COM

LEGENDS

PROJECT

# #337 CMMCC MECH. STACKS

SHOP DRAWINGS

CUSTOMER
HARMON INC.
BOLINGBROOK IL

ARCHITECT
LMN ARCHITECTS
SEATTLE WASHINGTON

GENERAL CONTRACTOR
TURNER

SUBMITTALS

| NO | REV | DATE | DESCRIPTION |
|---|---|---|---|
| 1 | -- | 1/12/12 | 1ST SUBMITTAL |
| 2 | 1 | 3/21/12 | 2ND SUBMITTAL |
| 3 | 2 | 6/5/12 | FIELD & FILE |

CONTENTS: ANCHOR DETAILS
DWN: WP SCALE: FULL SIZE

SHEET NUMBER
601

© 2010 GARDNER METAL SYSTEMS, INC. All Rights Reserved

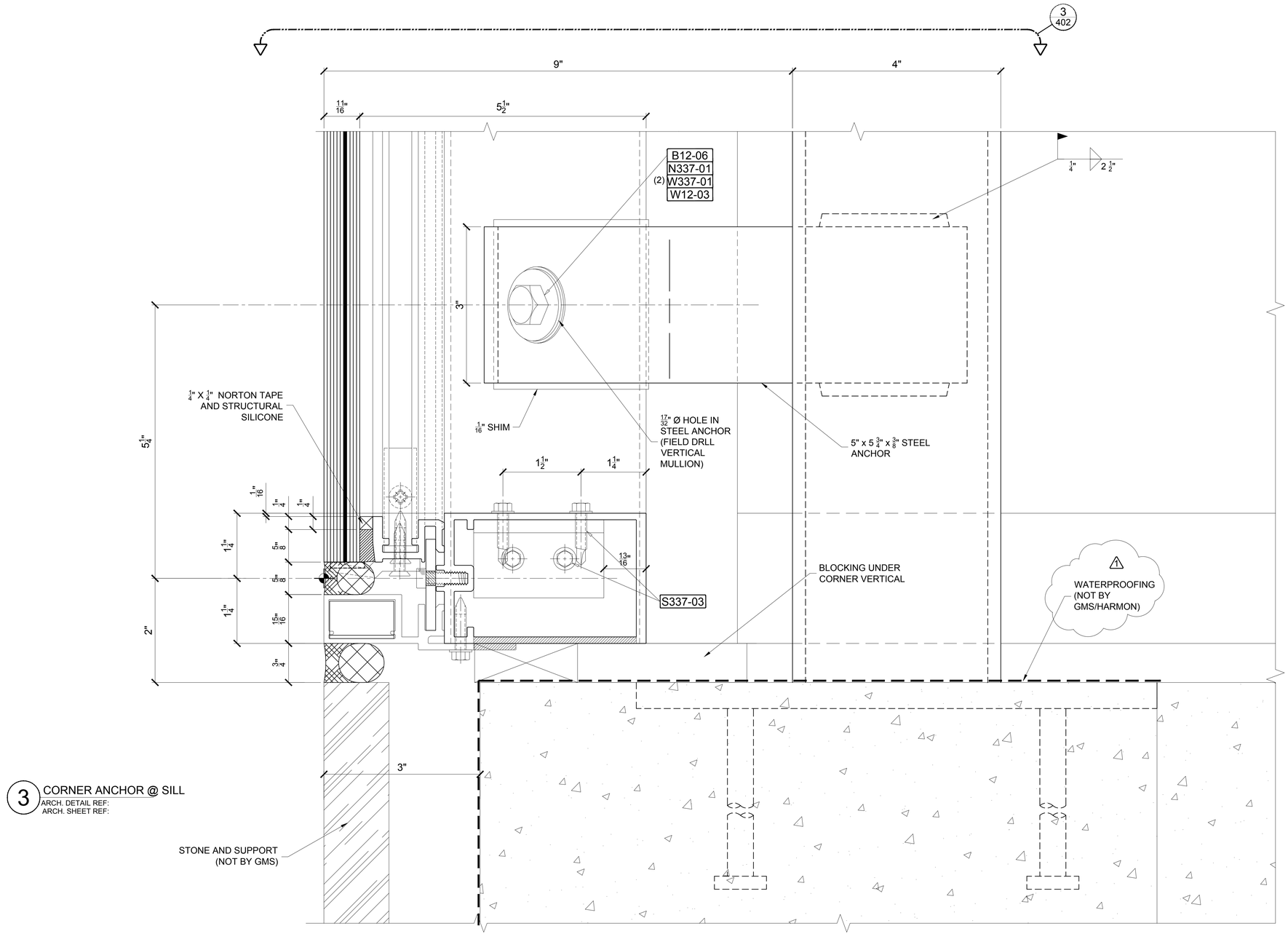


3 CORNER ANCHOR @ SILL
ARCH. DETAIL REF:
ARCH. SHEET REF:

WWW.GARDNERMETAL.COM

LEGENDS

PROJECT

# #337 CMMCC MECH. STACKS

SHOP DRAWINGS

CUSTOMER
HARMON INC.
BOLINGBROOK IL

ARCHITECT
LMN ARCHITECTS
SEATTLE WASHINGTON

GENERAL CONTRACTOR
TURNER

SUBMITTALS

| NO | REV | DATE | DESCRIPTION |
|---|---|---|---|
| 1 | -- | 1/12/12 | 1ST SUBMITTAL |
| 2 | 1 | 3/21/12 | 2ND SUBMITTAL |
| 3 | 2 | 6/5/12 | FIELD & FILE |

CONTENTS: ANCHOR DETAILS
DWN: WP SCALE: FULL SIZE

SHEET NUMBER
602

© 2010 GARDNER METAL SYSTEMS, INC. All Rights Reserved

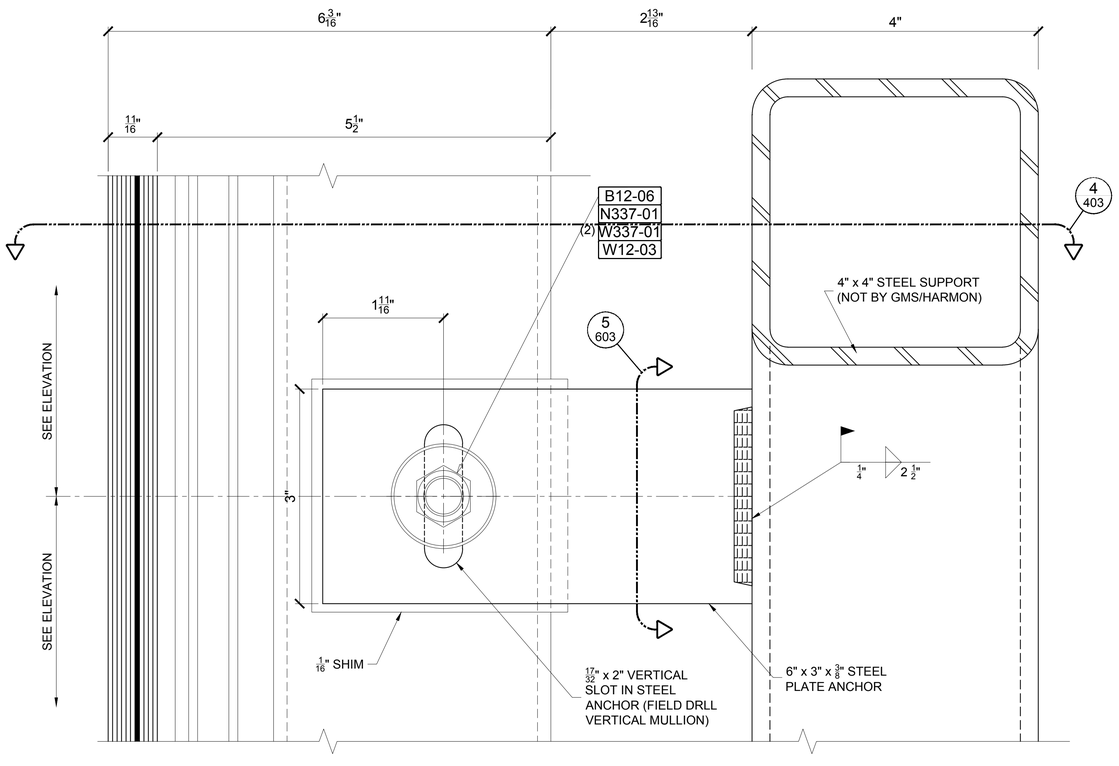


4 WINDLOAD ANCHOR
ARCH. DETAIL REF:
ARCH. SHEET REF:

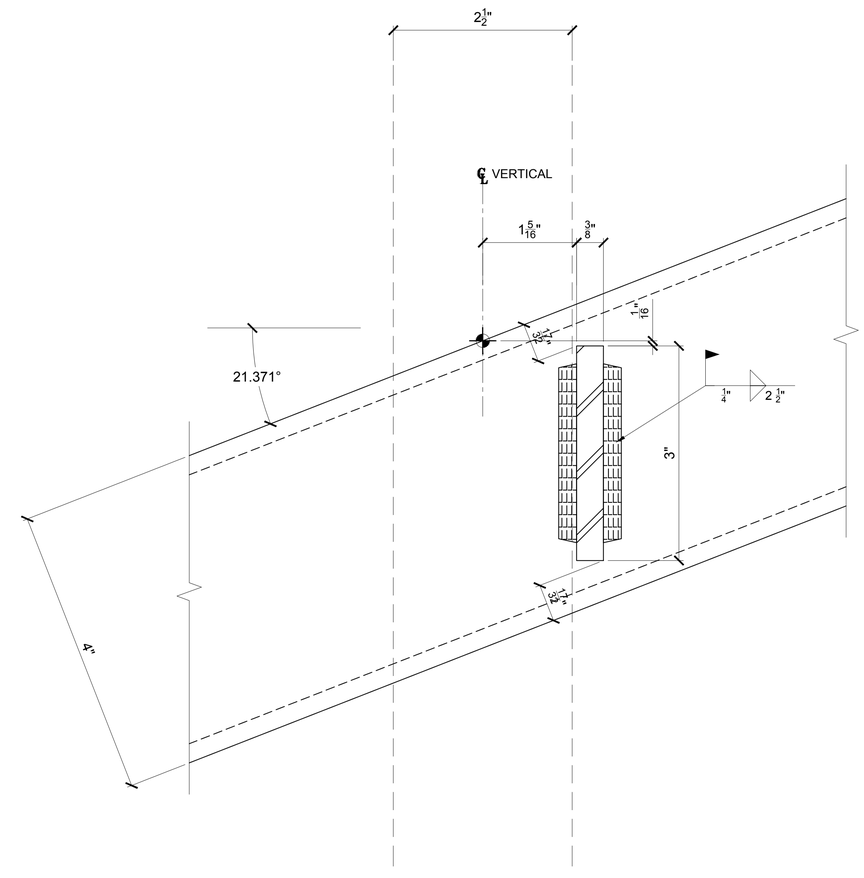


5 WINDLOAD ANCHOR
ARCH. DETAIL REF:
ARCH. SHEET REF:

GMS
WWW.GARDNERMETAL.COM

LEGENDS

PROJECT

#337
CMMCC
MECH. STACKS
SHOP DRAWINGS

CUSTOMER
HARMON INC.
BOLINGBROOK IL

ARCHITECT
LMN ARCHITECTS
SEATTLE WASHINGTON

GENERAL CONTRACTOR
TURNER

SUBMITTALS

| NO | REV | DATE | DESCRIPTION |
|---|---|---|---|
| 1 | -- | 1/12/12 | 1ST SUBMITTAL |
| 2 | 1 | 3/21/12 | 2ND SUBMITTAL |
| 3 | 2 | 6/5/12 | FIELD & FILE |

CONTENTS: ANCHOR DETAILS
DWN: WP SCALE: FULL SIZE

SHEET NUMBER
603

© 2010 GARDNER METAL SYSTEMS, INC. All Rights Reserved

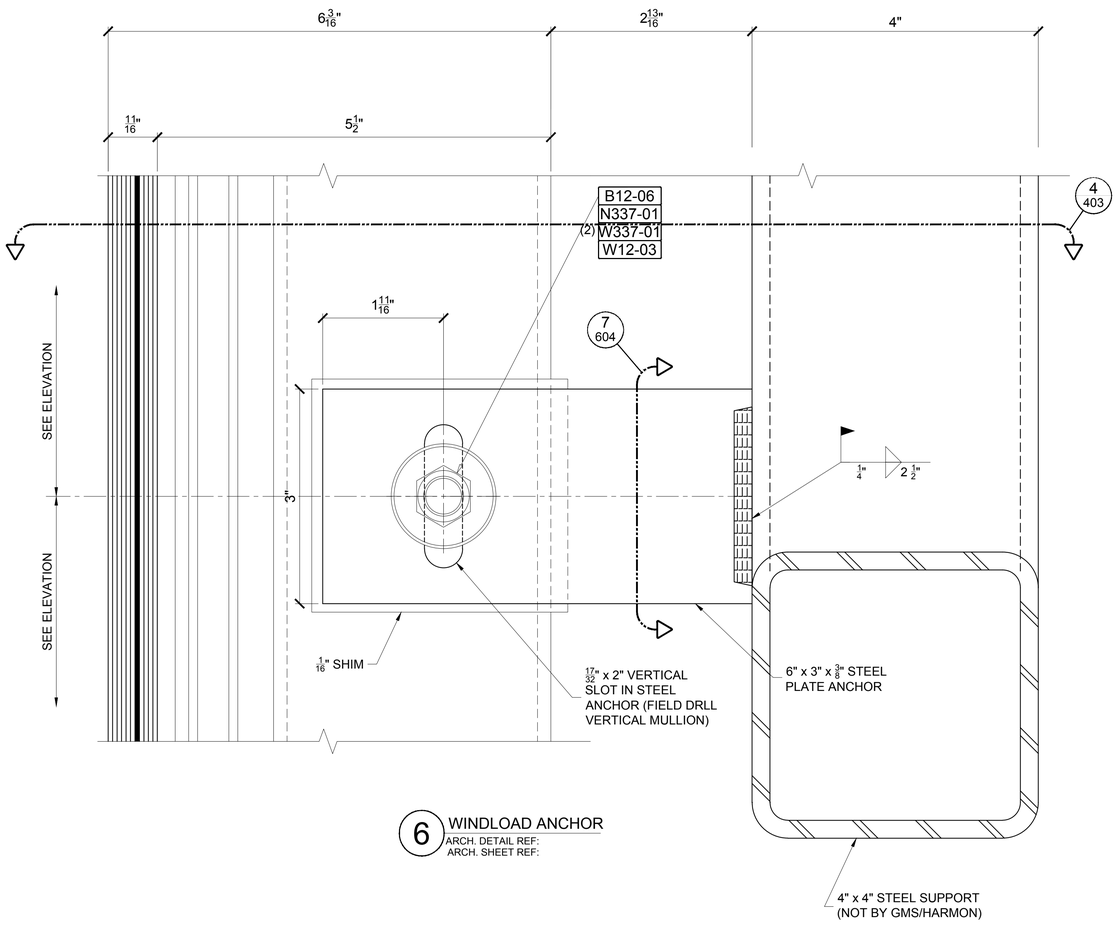


6 WINDLOAD ANCHOR
ARCH. DETAIL REF:
ARCH. SHEET REF:

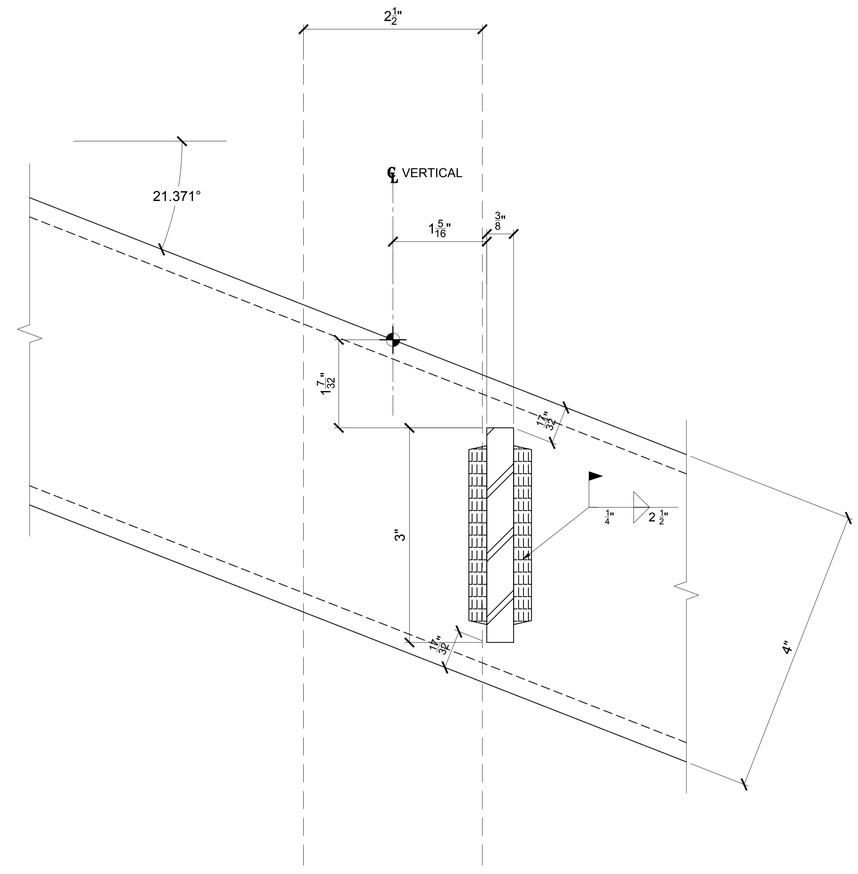


7 WINDLOAD ANCHOR
ARCH. DETAIL REF:
ARCH. SHEET REF:

GMS
WWW.GARDNERMETAL.COM

LEGENDS

PROJECT

# #337 CMMCC MECH. STACKS

SHOP DRAWINGS

CUSTOMER
HARMON INC.
BOLINGBROOK IL

ARCHITECT
LMN ARCHITECTS
SEATTLE WASHINGTON

GENERAL CONTRACTOR
TURNER

SUBMITTALS

| NO | REV | DATE | DESCRIPTION |
|---|---|---|---|
| 1 | -- | 1/12/12 | 1ST SUBMITTAL |
| 2 | 1 | 3/21/12 | 2ND SUBMITTAL |
| 3 | 2 | 6/5/12 | FIELD & FILE |

CONTENTS: ANCHOR DETAILS
DWN: WP SCALE: FULL SIZE

SHEET NUMBER
604

© 2010 GARDNER METAL SYSTEMS, INC. All Rights Reserved

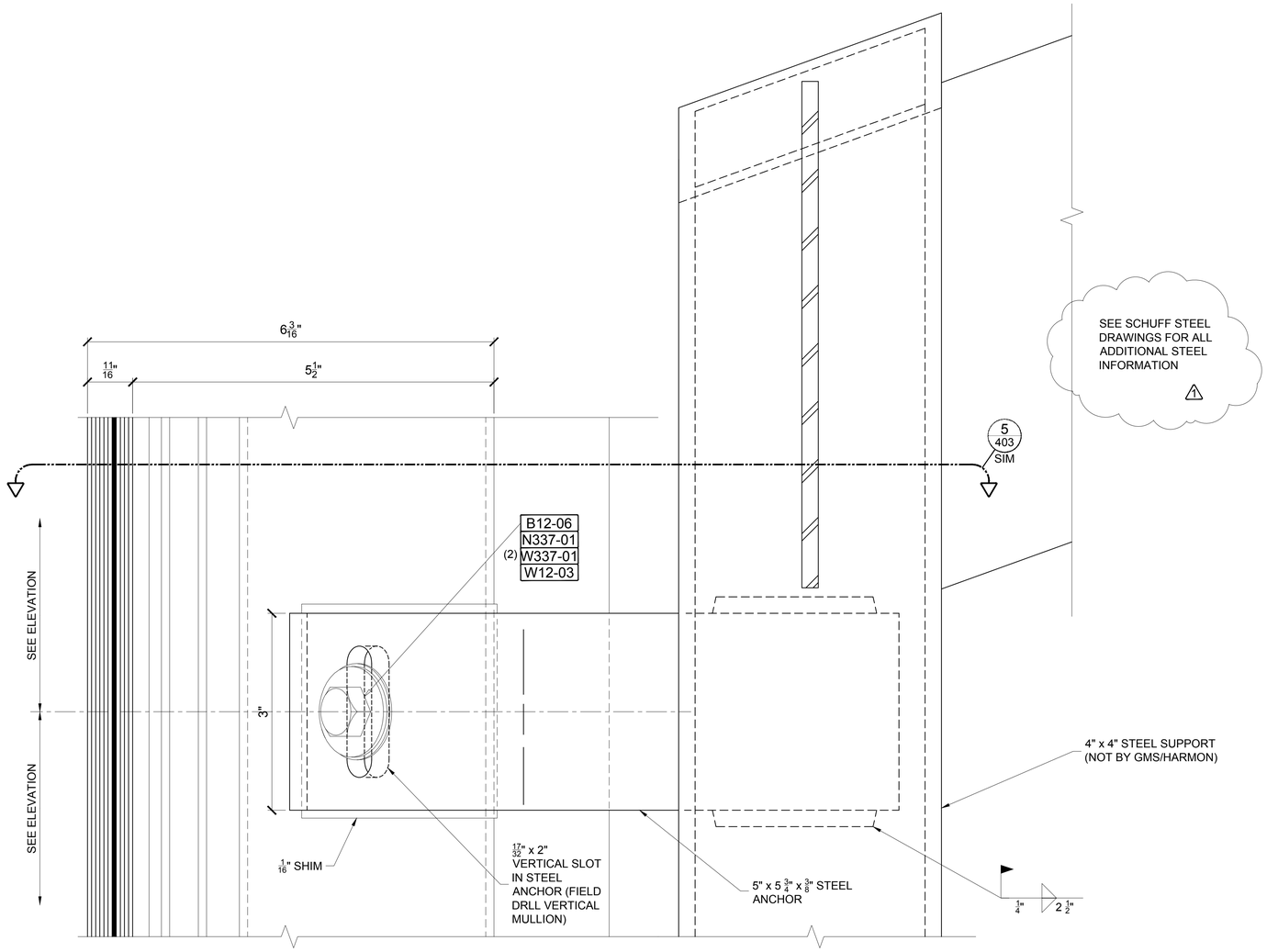


8 WINDLOAD ANCHOR
ARCH. DETAIL REF:
ARCH. SHEET REF:

GMS
WWW.GARDNERMETAL.COM

LEGENDS

PROJECT

#337
CMMCC
MECH. STACKS

SHOP DRAWINGS

CUSTOMER
HARMON INC.
BOLINGBROOK IL

ARCHITECT
LMN ARCHITECTS
SEATTLE WASHINGTON

GENERAL CONTRACTOR
TURNER

SUBMITTALS

| NO | REV | DATE | DESCRIPTION |
|---|---|---|---|
| 1 | -- | 1/12/12 | 1ST SUBMITTAL |
| 2 | 1 | 3/21/12 | 2ND SUBMITTAL |
| 3 | 2 | 6/5/12 | FIELD & FILE |

CONTENTS: ANCHOR DETAILS
DWN: WP SCALE: FULL SIZE

SHEET NUMBER
605

© 2010 GARDNER METAL SYSTEMS, INC. All Rights Reserved

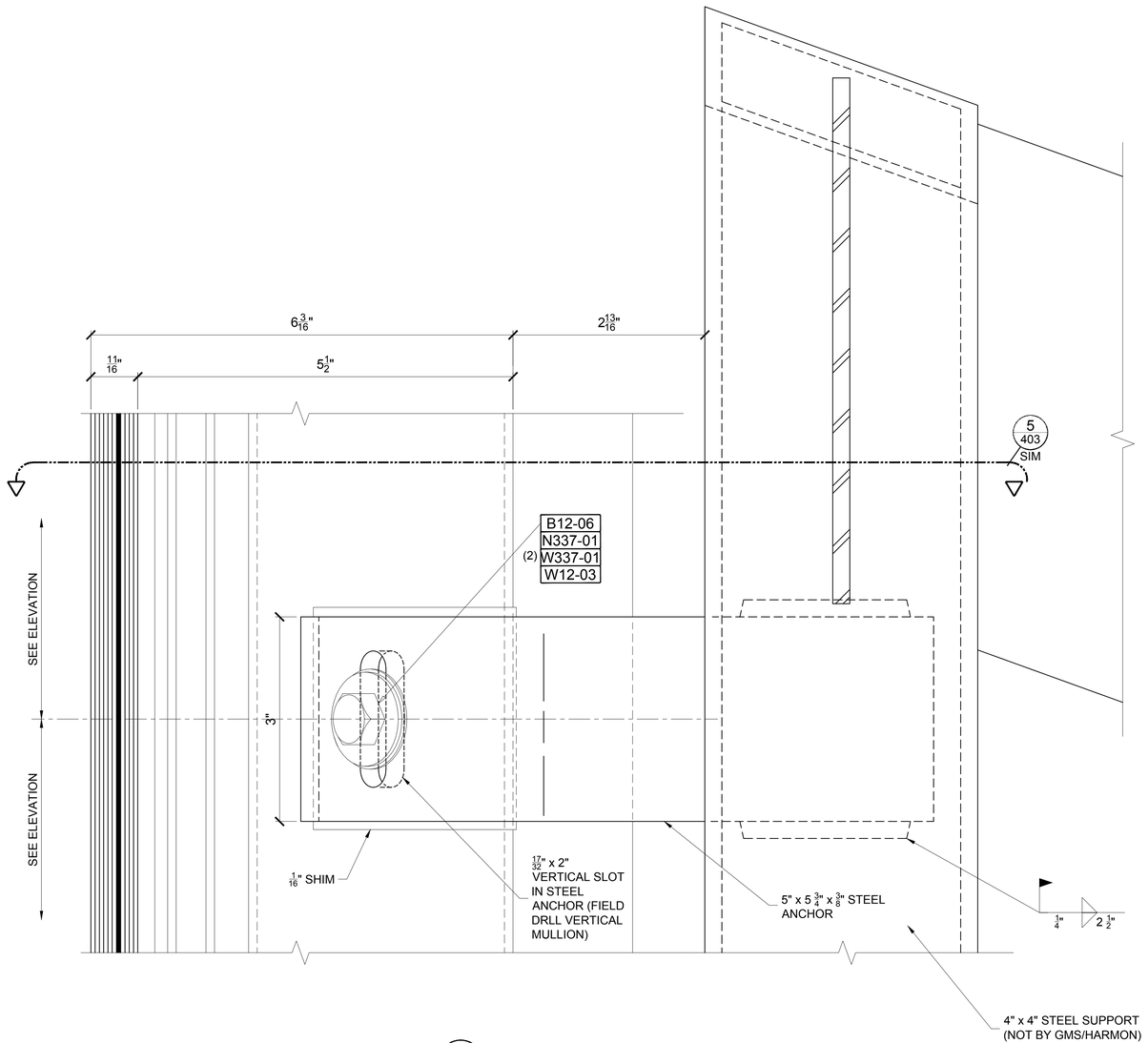


SEE SCHUFF STEEL DRAWINGS FOR ALL ADDITIONAL STEEL INFORMATION

1

9 WINDLOAD ANCHOR
ARCH. DETAIL REF:
ARCH. SHEET REF:

GMS
WWW.GARDNERMETAL.COM

LEGENDS

PROJECT

#337
CMMCC
MECH. STACKS
SHOP DRAWINGS

CUSTOMER
HARMON INC.
BOLINGBROOK IL

ARCHITECT
LMN ARCHITECTS
SEATTLE WASHINGTON

GENERAL CONTRACTOR
TURNER

SUBMITTALS

| NO | REV | DATE | DESCRIPTION |
|---|---|---|---|
| 1 | -- | 1/12/12 | 1ST SUBMITTAL |
| 2 | 1 | 3/21/12 | 2ND SUBMITTAL |
| 3 | 2 | 6/5/12 | FIELD & FILE |
| | | | |

CONTENTS: ANCHOR DETAILS
DWN: WP SCALE: FULL SIZE

SHEET NUMBER
606

© 2010 GARDNER METAL SYSTEMS, INC. All Rights Reserved

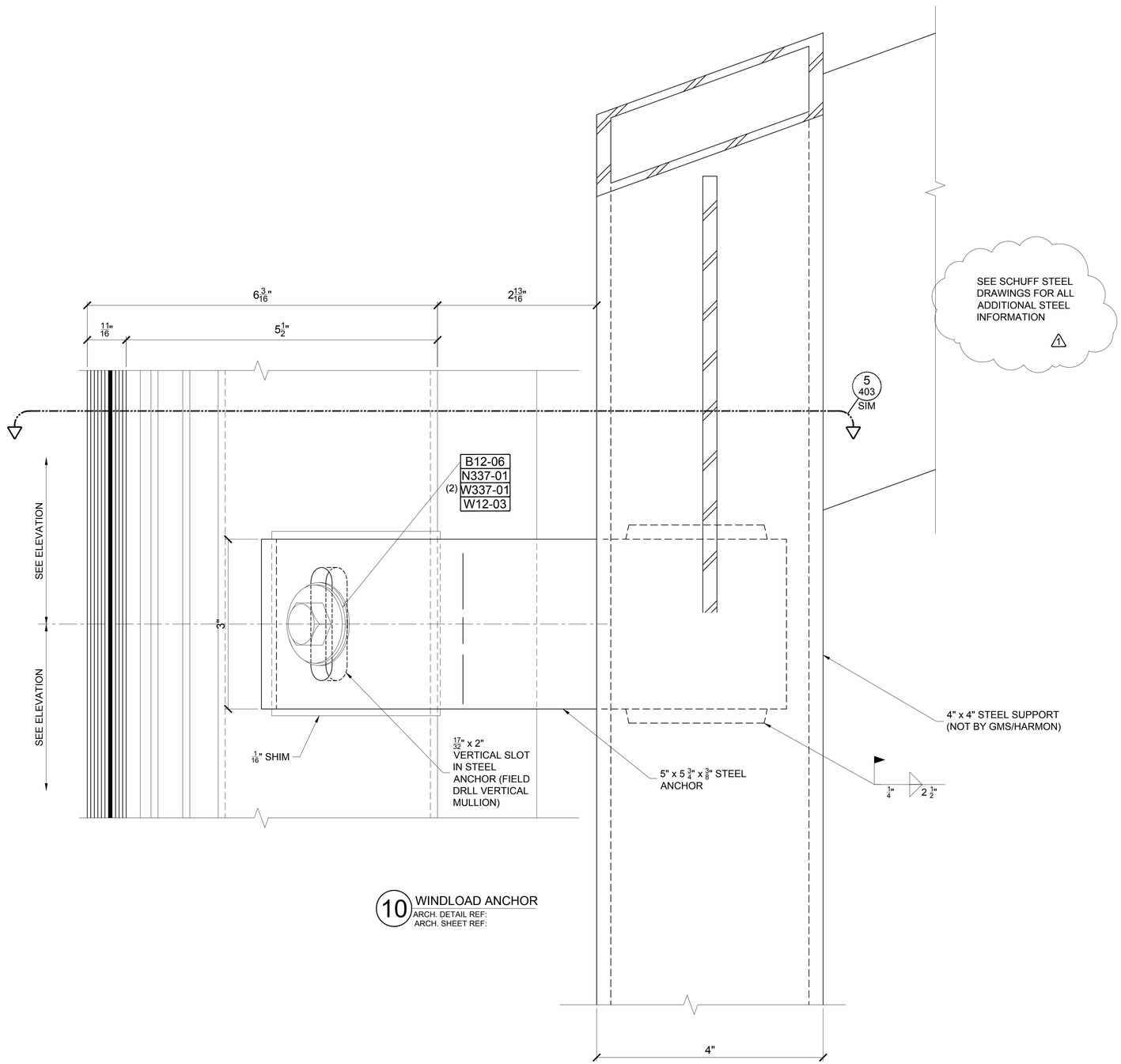


10 WINDLOAD ANCHOR
ARCH. DETAIL REF:
ARCH. SHEET REF:

GMS
WWW.GARDNERMETAL.COM

LEGENDS

PROJECT

# #337 CMMCC MECH. STACKS

SHOP DRAWINGS

CUSTOMER
HARMON INC.
BOLINGBROOK IL

ARCHITECT
LMN ARCHITECTS
SEATTLE WASHINGTON

GENERAL CONTRACTOR
TURNER

SUBMITTALS

| NO | REV | DATE | DESCRIPTION |
|---|---|---|---|
| 1 | -- | 1/12/12 | 1ST SUBMITTAL |
| 2 | 1 | 3/21/12 | 2ND SUBMITTAL |
| 3 | 2 | 6/5/12 | FIELD & FILE |

CONTENTS: ANCHOR DETAILS
DWN: WP SCALE: FULL SIZE

SHEET NUMBER
607

© 2010 GARDNER METAL SYSTEMS, INC. All Rights Reserved

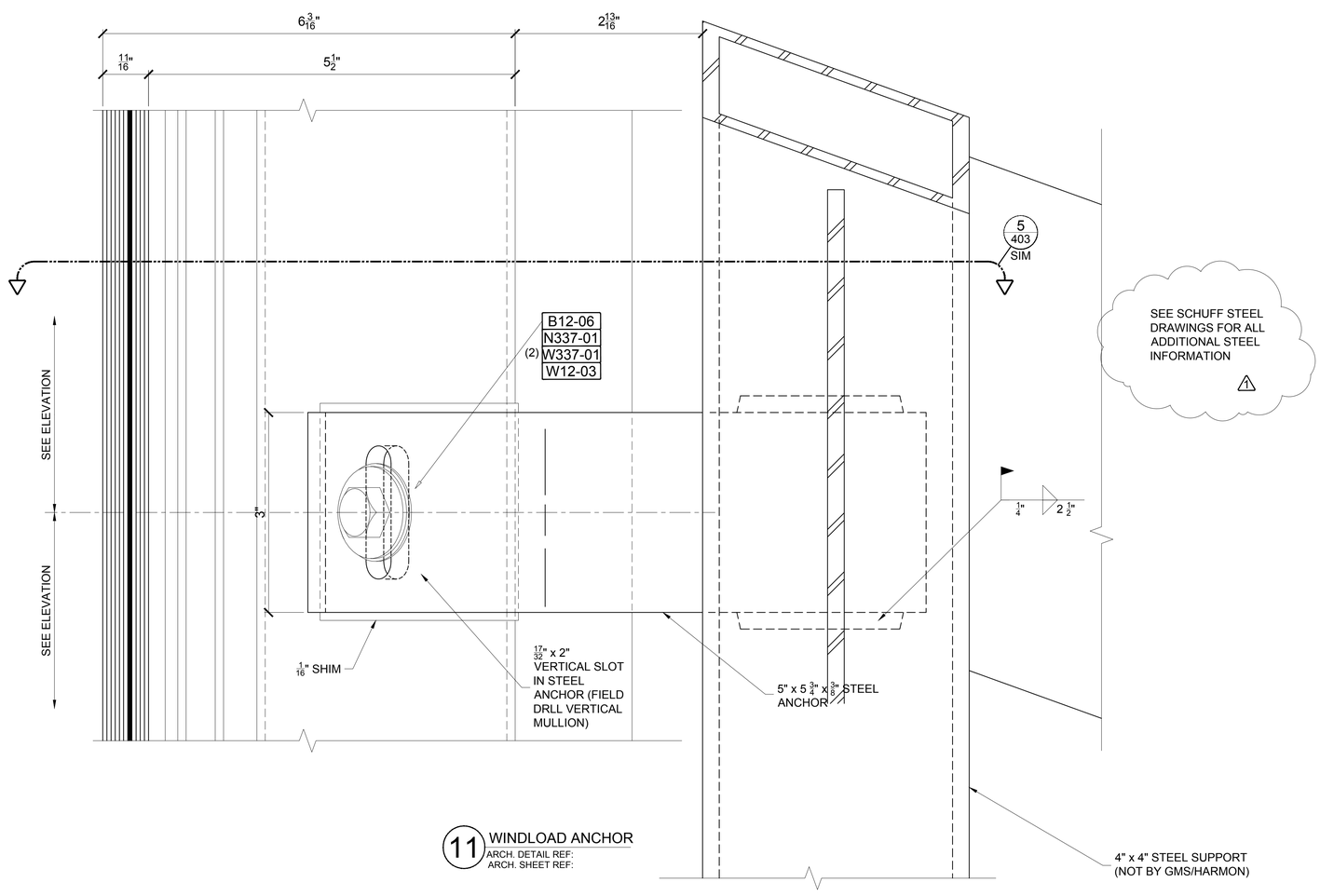


11 WINDLOAD ANCHOR
ARCH. DETAIL REF:
ARCH. SHEET REF:

WWW.GARDNERMETAL.COM

LEGENDS

PROJECT

#337 CMMCC MECH. STACKS SHOP DRAWINGS

CUSTOMER
HARMON INC.
BOLINGBROOK IL

ARCHITECT
LMN ARCHITECTS
SEATTLE WASHINGTON

GENERAL CONTRACTOR
TURNER

SUBMITTALS

| NO | REV | DATE | DESCRIPTION |
|---|---|---|---|
| 1 | -- | 1/12/12 | 1ST SUBMITTAL |
| 2 | 1 | 3/21/12 | 2ND SUBMITTAL |
| 3 | 2 | 6/5/12 | FIELD & FILE |

CONTENTS: ANCHOR DETAILS
DWN: WP SCALE: FULL SIZE

SHEET NUMBER
608

© 2010 GARDNER METAL SYSTEMS, INC. All Rights Reserved

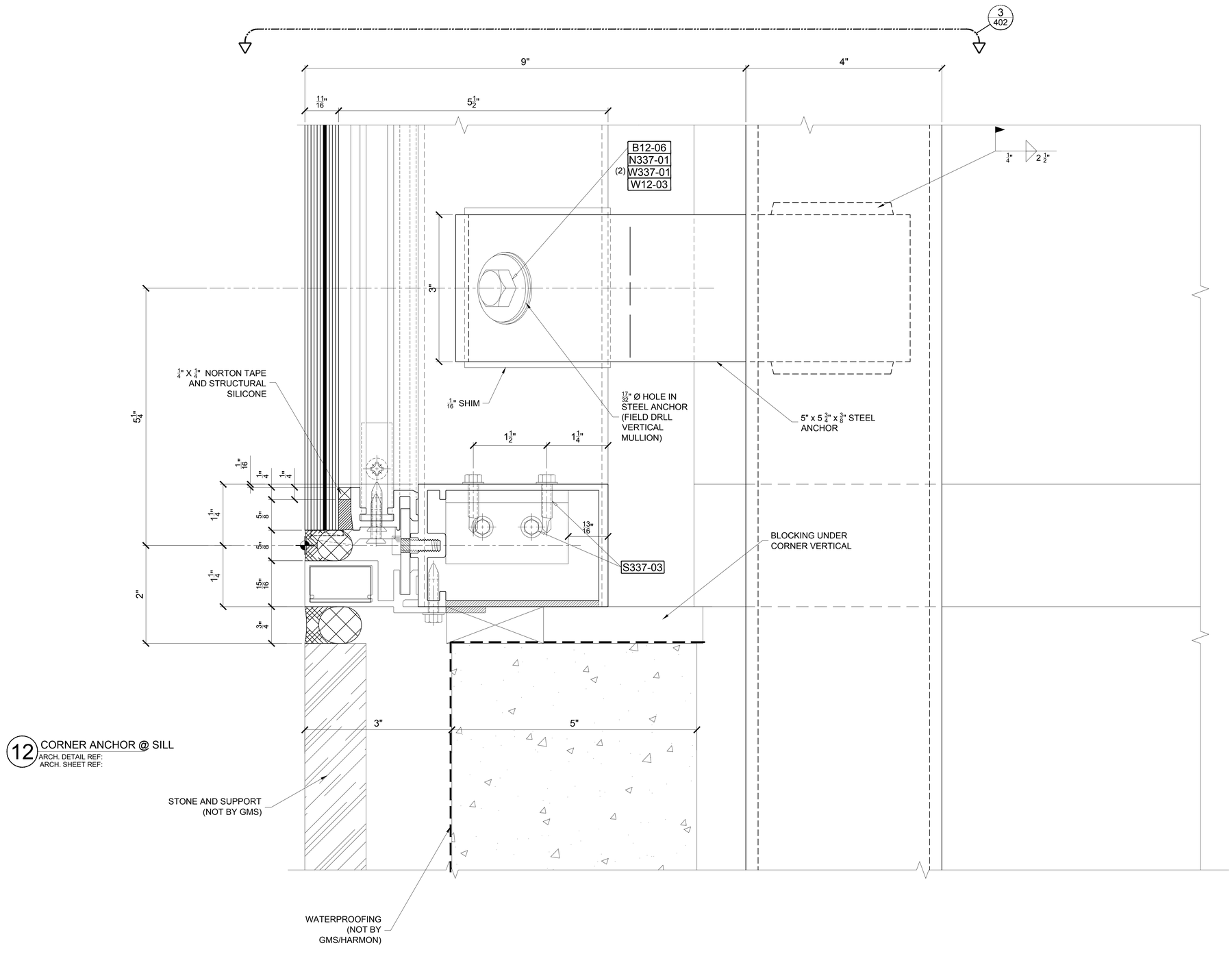


GMS
WWW.GARDNERMETAL.COM

LEGENDS

PROJECT

# #337 CMMCC MECH. STACKS

SHOP DRAWINGS

CUSTOMER
HARMON INC.
BOLINGBROOK IL

ARCHITECT
LMN ARCHITECTS
SEATTLE WASHINGTON

GENERAL CONTRACTOR
TURNER

SUBMITTALS

| NO | REV | DATE | DESCRIPTION |
|---|---|---|---|
| 1 | -- | 1/12/12 | 1ST SUBMITTAL |
| 2 | 1 | 3/21/12 | 2ND SUBMITTAL |
| 3 | 2 | 6/5/12 | FIELD & FILE |

CONTENTS: ANCHOR DETAILS
DWN: JNM SCALE: FULL SIZE
SHEET NUMBER
1 609

© 2010 GARDNER METAL SYSTEMS, INC. All Rights Reserved